Valve systems → Standardized valve systems

Valve system, Series 581

► Qn = 1100 l/min ► Pilot valve width: 30 mm CNOMO ► compressed air connection output: Base plate ISO 5599-1 ► Manual override: without detent, without

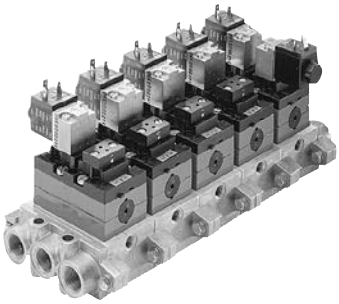

P581_138

Standards	ISO 5599-1
Version	Single plug-in wiring
Blocking principle	Single base plate principle
Working pressure min./max.	-0.95 bar / 16 bar
Ambient temperature min./max.	-15°C / +50°C
Medium	Compressed air
Max. particle size	50 μm
Oil content of compressed air	0 mg/m³ - 5 mg/m³
Protection class with electrical connector/plug	IP 65
DC operating voltage	24 V
Voltage tolerance DC	-10% / +10%
Operational voltage AC at 50 Hz	230 V, 42 V
Voltage tolerance AC 50 Hz	-10% / +10%

An example configuration is illustrated. The delivered product may thus deviate from the illustration.

Technical Remarks
■ The pressure dew point must be at least 15 °C under ambient and medium temperature and may not exceed 3 °C. ■ The oil content of compressed air must remain constant during the life cycle. ■ Use only the approved oils from Bosch Rexroth, see chapter „Technical information“.

Configurable product	
	This product is configurable. Please use our Internet configurator at www.boschrexroth.com/pneumatics or contact the nearest Bosch Rexroth sales office.

Valve systems → Standardized valve systems

Valve system, Series 581

► Qn = 1100 l/min ► Pilot valve width: 30 mm CNOMO ► compressed air connection output: Base plate ISO 5599-1 ► Manual override: without detent, without

Dimensions, all ports on bottom

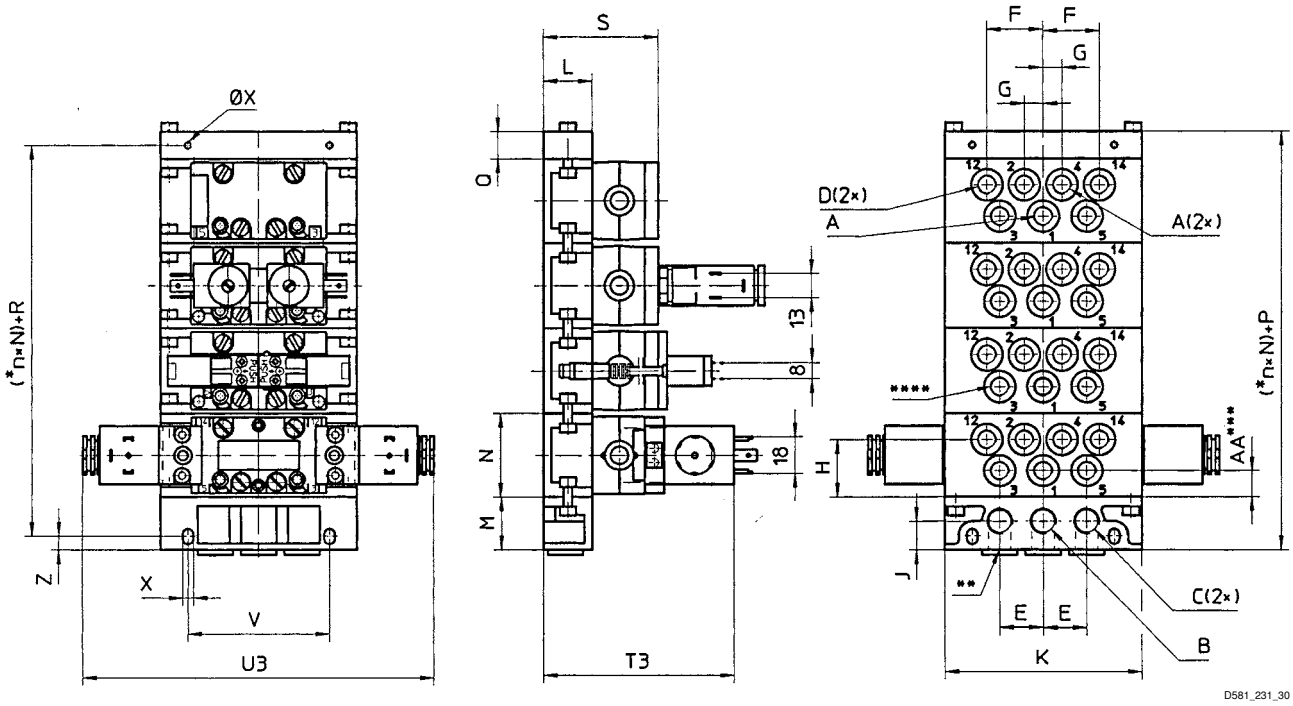

* n = number of subbases.
** Alternative port openings, closed with plugs.
*** Only on subbases with separate intake.
**** Subbase 5801680000 can also be connected to port 3 and 5.
An example configuration is illustrated. The delivered product may thus deviate from the illustration.

A	B	C	D	E	F	G	H	J	K	L	M	N	P (=M+Q)
G 1/8	G 1/4	G 1/4	G 1/8	22	28.5	9.5	29.5	14.5	100	25	27	43	41
G 1/4	G 3/8	G 3/8	G 1/8	27	40	12.5	26.5	20	122	30	34	43	49
Ø 6	G 1/4	G 1/4	Ø 4	22	28.5	9.5	29.5	14.5	100	25	27	43	41
Ø 8	G 3/8	G 3/8	Ø 6	27	40	12.5	26.5	20	122	30	34	43	49

A	Q	R (=Q/2+M–Z)	S	V	X	Z	AA	T3	U3			
G 1/8	14	27.5	60	72	5.4	7	8	100	174			
G 1/4	15	34	64	94	6.4	8	10	101	174			
Ø 6	14	27.5	60	72	5.4	7	–	100	174			
Ø 8	15	34	64	94	6.4	8	–	101	174			

A = ports 2 and 4 in the intermediate plate
B = port 1 in the supply plate
C = ports 3 and 5 in the supply plate
D = ports 12 and 14 in the intermediate plate

Valve systems → Standardized valve systems

Valve system, Series 581

► Qn = 1100 l/min ► Pilot valve width: 30 mm CNOMO ► compressed air connection output: Base plate ISO 5599-1 ► Manual override: without detent, without

Dimensions, ports 2 and 4 on bottom, Ports 12 and 14 on side

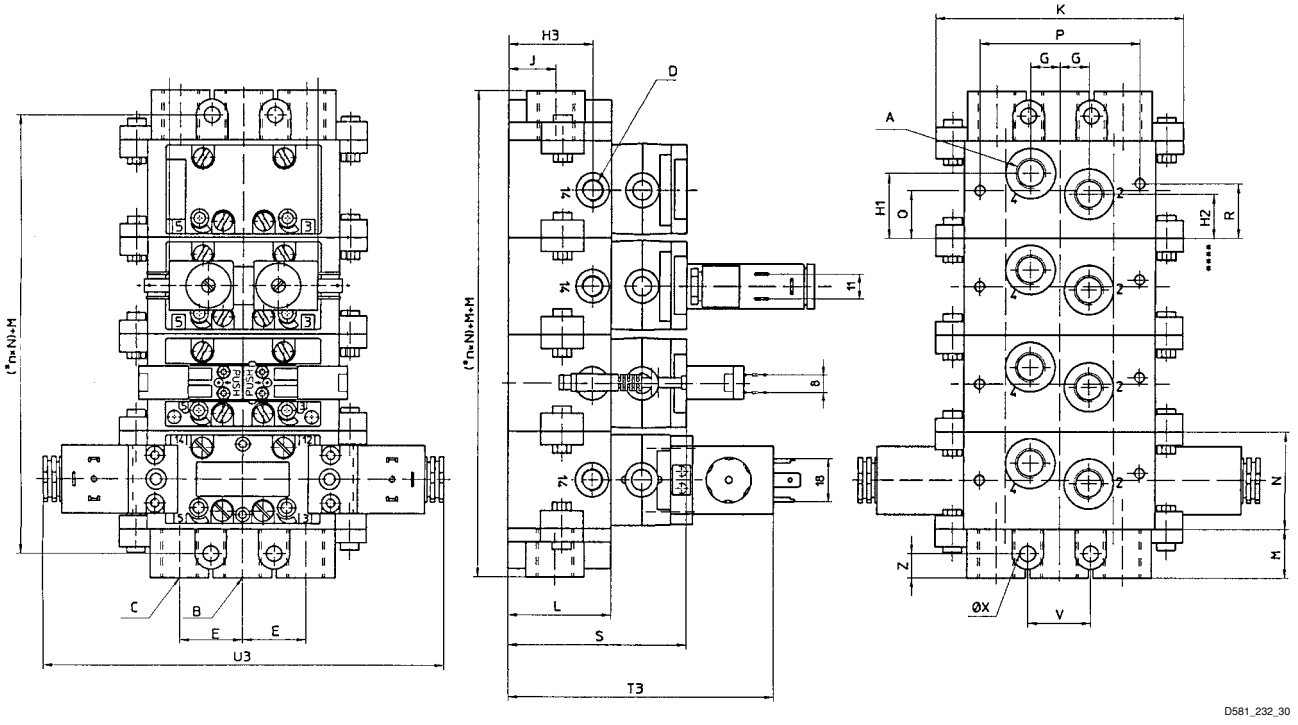

* n = Number of subbases
An example configuration is illustrated. The delivered product may thus deviate from the illustration.

A	B	C	D	E	G	H1	H2	H3	J	K	L	M	N	P
G 1/4	G 3/8	G 3/8	G 1/8	28	13	29	20	39.5	22	110	46	22	43	71

A	Q	R	S	V	X	Z	T3	U3						
G 1/4	21.5	24.5	81	28	7	11	121	174						

Valve systems → Standardized valve systems

Valve system, Series 581

► Qn = 1100 l/min ► Pilot valve width: 30 mm CNOMO ► compressed air connection output: Base plate ISO 5599-1 ► Manual override: without detent, without

Dimensions, ports 2 and 4 on side, ports 12 and 14 on bottom

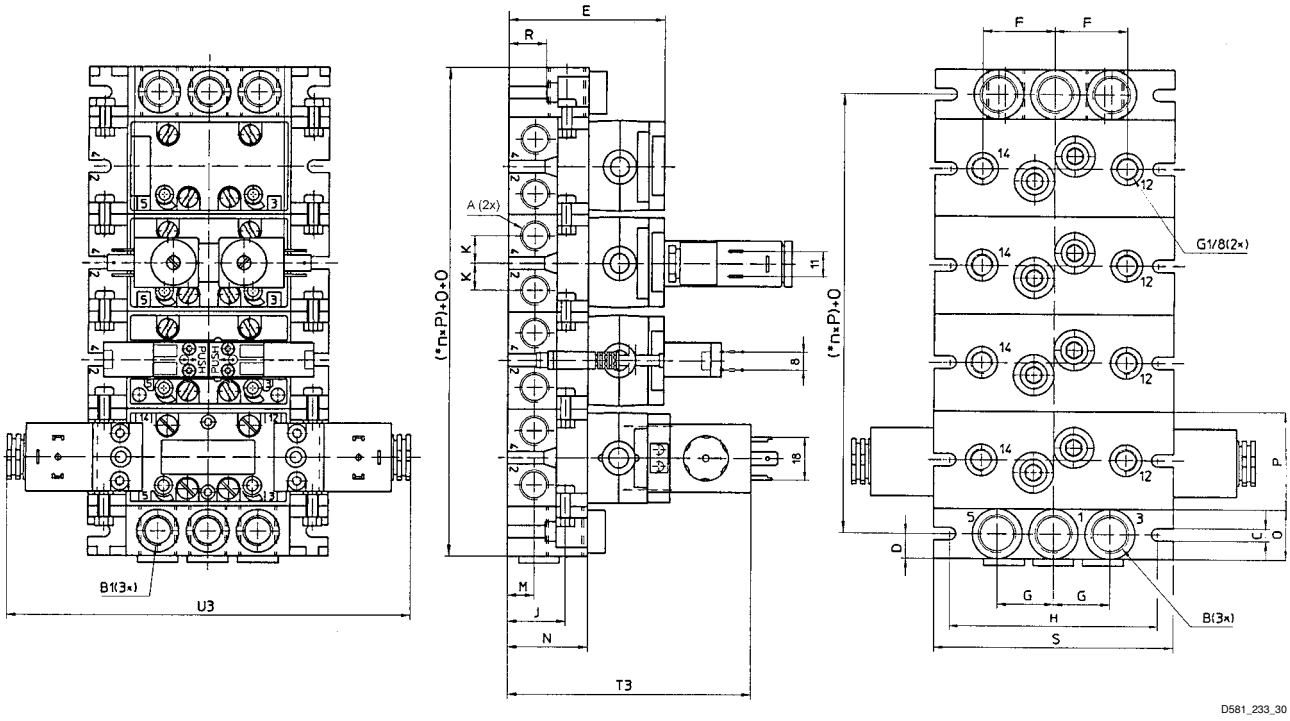

* n = Number of subbases
An example configuration is illustrated. The delivered product may thus deviate from the illustration.

A	B	B1	C	D	E	F	G	H	J	R	K	M	N	O
G 1/4	G 3/8	G 1/4	5.5	11	71	32	22	92	24	17	12	12	36	22

A	P	S	T3	U3										
G 1/4	43	106	111	174										