Piston rod cylinder → Standard cylinders

Profile cylinder, Series ICL

► Ø 25 mm ► Ports: G 1/8 ► double-acting ► with magnetic piston ► cushioning: pneumatically, adjustable ► corrosion-protected ► Piston rod: external thread ► suitable for use in food processing

Compressed air connection	internal thread
Working pressure min./max.	1.5 bar / 10 bar
Ambient temperature min./max.	-20°C / +80°C
Medium temperature min./max.	-20°C / +80°C
Medium	Compressed air
Max. particle size	50 µm
Oil content of compressed air	0 mg/m³
Pressure for determining piston forces	6,3 bar

16469

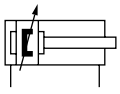

a15

Materials:	
Cylinder tube	Aluminum, anodized
Piston rod	Stainless steel
Piston	Polyamide, fiber-glass reinforced
Front cover	Aluminum, anodized
End cover	Aluminum, anodized
Seal	Nitrile butadiene rubber
Nut for piston rod	Stainless steel
Scraper	Polyester elastomer
Tie-rods	Stainless steel
Lubricant	ISO 21469 (NSF-H1)

Technical Remarks

- The pressure dew point must be at least 15 °C under ambient and medium temperature and may not exceed 3 °C.
- The oil content of compressed air must remain constant during the life cycle.
- Use only the approved oils from Bosch Rexroth, see chapter „Technical information“.
- Clamping piece for magnetic field sensor necessary

Piston Ø	**[mm]**	**25**				
Retracting piston force	[N]	238				
Extracting piston force	[N]	309				
Cushioning length	[mm]	11				
Cushioning energy	[J]	2.3				
Stroke max.	[mm]	1500				

Piston rod cylinder → Standard cylinders

Profile cylinder, Series ICL

► Ø 25 mm ► Ports: G 1/8 ► double-acting ► with magnetic piston ► cushioning: pneumatically, adjustable ► corrosion-protected ► Piston rod: external thread ► suitable for use in food processing

	Piston Ø **Piston rod thread** **Ports** **Piston rod Ø** **Piston rod thread - type**	**25** **M10x1,25** **G 1/8** **12** **external thread**				
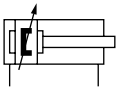	Stroke 25	**R412015891**				
	50	R412015716				
	80	R412015892				
	100	R412017836				
	125	R412017843				
	160	R412017848				
	200	R412017853				
	250	R412017857				
	320	R412017863				
	400	R412017868				
	500	R412017871				

Cushioning diagram

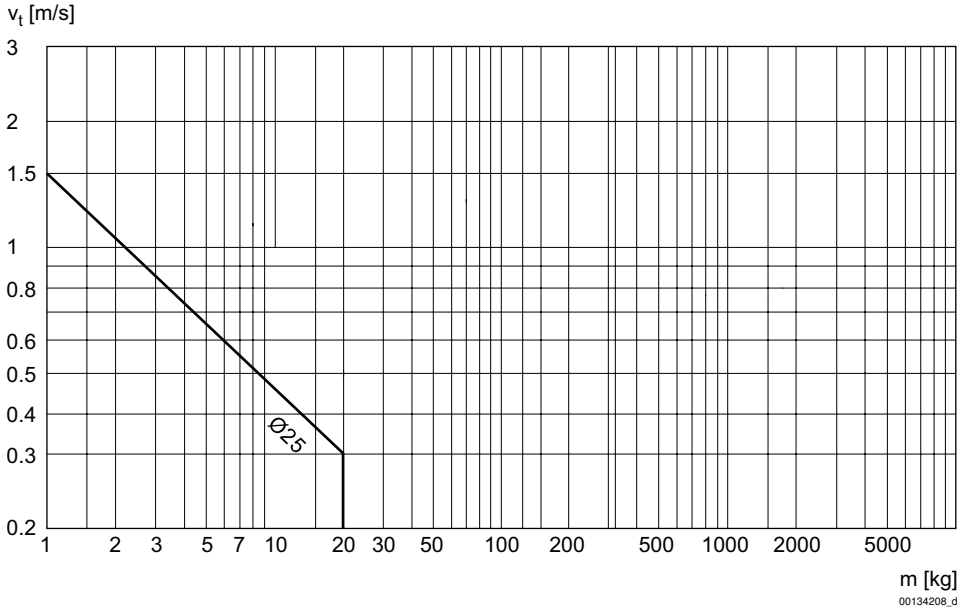

Piston rod cylinder → Standard cylinders

Profile cylinder, Series ICL

► Ø 25 mm ► Ports: G 1/8 ► double-acting ► with magnetic piston ► cushioning: pneumatically, adjustable ► corrosion-protected ► Piston rod: external thread ► suitable for use in food processing

Dimensions

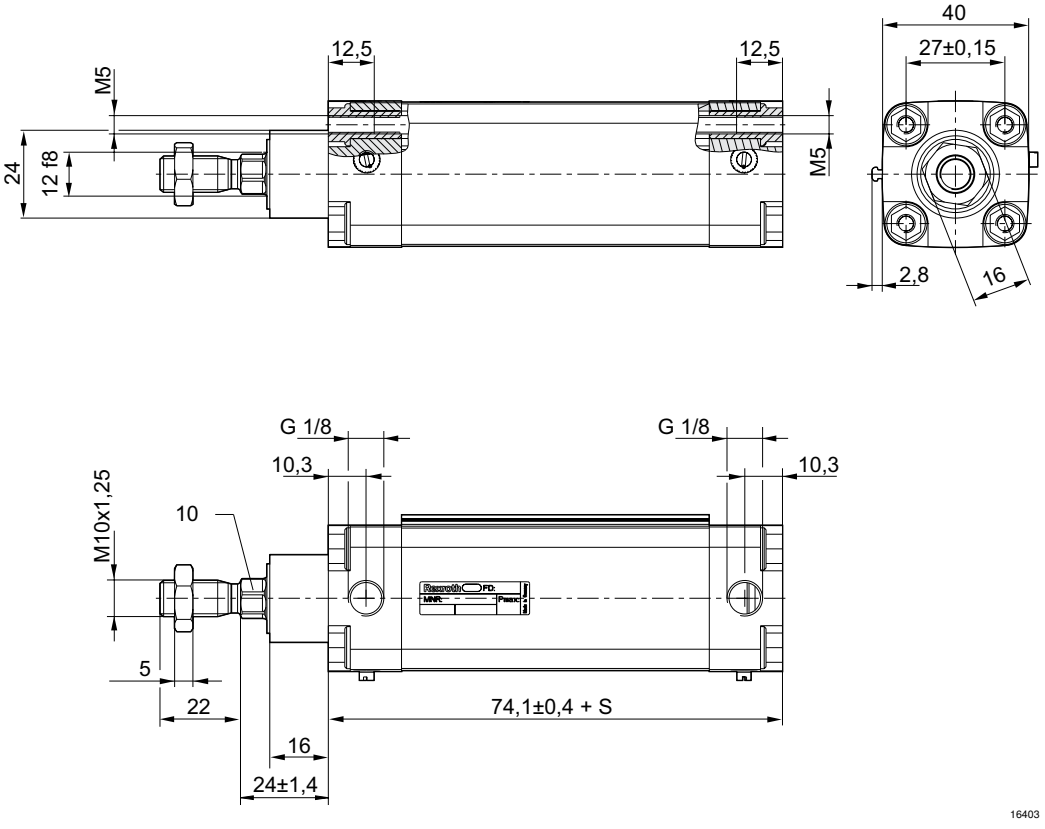

S = stroke