Preparation of compressed air → Supplementary products

Pressure regulator, MH1-RGS

► 1/4 NPT - 1/2 NPT ► Qn=325 - 2000 l/min ► Activation: mechanical

17158_a

Mounting orientation	Any
Working pressure min./max.	0.5 bar / 17 bar
Medium	Compressed air
Medium temperature min./max.	-30°C / +80°C
Ambient temperature min./max.	-30°C / +80°C
Regulator type	Diaphragm-type pressure regulator
Regulator function	with relieving air exhaust
Adjustment range min./max.	0.5 bar / 9 bar
Pressure supply	single
Materials:	
Housing	Stainless steel, acid-proof
Seals	Acrylonitrile Butadiene Rubber

Technical Remarks

- The pressure dew point must be at least 15 °C under ambient and medium temperature and may not exceed 3 °C.
- These pneumatic components with NPTF or inch thread dimensions are only available from our US sales organization

	Port	Qn	Weight	Note	Part No.
		[l/min]	[kg]		
	1/4 NPT	325	0.3	Fig. 1	R432034664
	1/2 NPT	2000	1.01	Fig. 2	R432034670

Max. pressure gauge Ø in blocked state [mm]: 50
Nominal flow Qn at p1 = 6.3 bar and Δp = 1 bar

Flow rate characteristic, Fig. 1

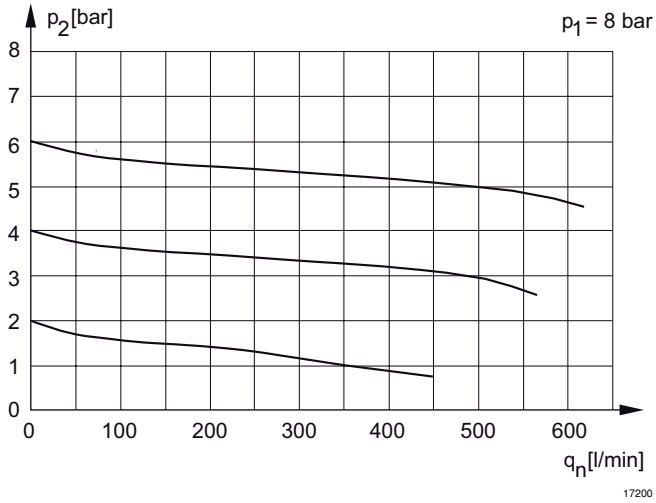

p1 = Working pressure
p2 = Secondary pressure
qn = Nominal flow

Preparation of compressed air → Supplementary products

Pressure regulator, MH1-RGS

► 1/4 NPT - 1/2 NPT ► Qn=325 - 2000 l/min ► Activation: mechanical

Flow rate characteristic, Fig. 2

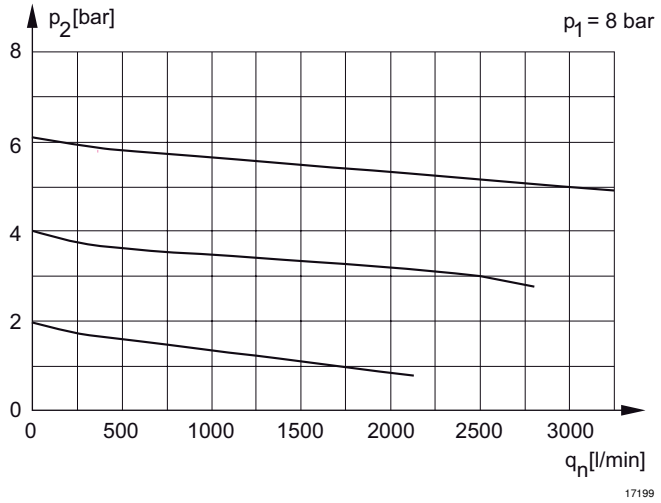

p1 = Working pressure
p2 = Secondary pressure
qn = Nominal flow

Dimensions in inches, Fig. 1

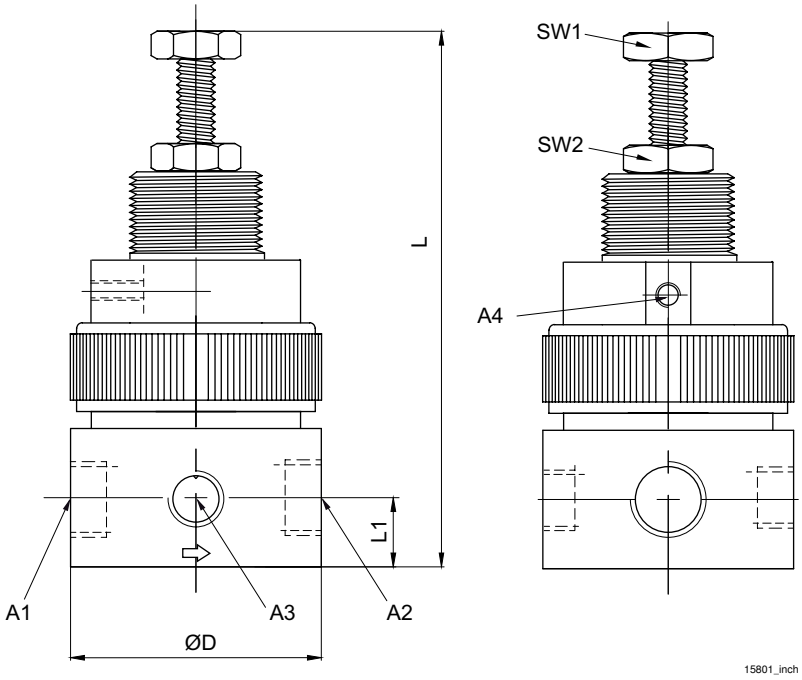

A1 = input
A2 = output
A3 = pressure gauge connection
A4 = relieving exhaust

Preparation of compressed air → Supplementary products

Pressure regulator, MH1-RGS

► 1/4 NPT - 1/2 NPT ► Qn=325 - 2000 l/min ► Activation: mechanical

Dimensions in inches

A1	A2	A3	A4	L *)	L1	ØD	SW1	SW2			
1/4 NPT	1/4 NPT	1/8 NPT	M5	3.35	0.39	1.41	0.39	0.39			
*) max.											

Dimensions in inches, Fig. 2

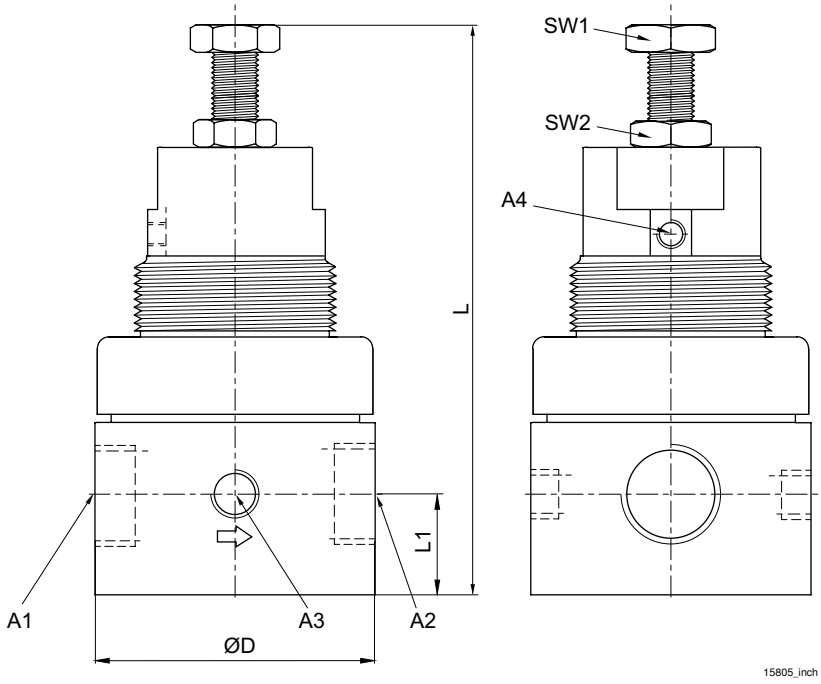

A1 = input
A2 = output
A3 = pressure gauge connection
A4 = relieving exhaust

Dimensions in inches

A1	A2	A3	A4	L *)	L1	ØD	SW1	SW2			
1/2 NPT	1/2 NPT	1/8 NPT	M5	4.76	0.81	2.26	0.51	0.51			
*) max.											