Preparation of compressed air → Maintenance units and components

Pressure regulator, Series AS1-RGS-...-DS

► G 1/4 ► Air supply: left ► Qn=1000 l/min ► Activation: manual ► with continuous pressure supply

00137239

Mounting orientation	Any
Working pressure min./max.	See table below
Medium	Compressed air
Medium temperature min./max.	-10°C / +50°C
Ambient temperature min./max.	-10°C / +50°C
Regulator type	Diaphragm-type pressure regulator, Can be assembled into blocks
Regulator function	with relieving air exhaust
Adjustment range min./max.	See table below
Materials:	
Housing	Polyamide
Front plate	Acrylonitrile butadiene styrene
Seals	Acrylonitrile Butadiene Rubber

Technical Remarks
■ The pressure dew point must be at least 15 °C under ambient and medium temperature and may not exceed 3 °C.

		Port	Qn	Working pressure min./max.	Adjustment range min. - max..	Weight	Fig.	Part No.
			[l/min]	[bar]	[bar]	[kg]		
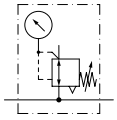		G 1/4	1000	0.2 / 12	0.2 - 4	0.209	Fig. 1	**R412014630**
				0.5 / 12	0.5 - 8			**R412014631**
				0.5 / 12	0.5 - 10			R412014632
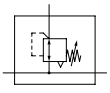	-	G 1/4	1000	0.1 / 12	0.1 - 1	0.206	Fig. 2	**R412010558**
				0.2 / 12	0.2 - 4			R412014636
				0.5 / 12	0.5 - 8			R412014637
				0.5 / 12	0.5 - 10			R412014638

Max. pressure gauge Ø in blocked state [mm]: 40
Nominal flow Qn at p1 = 6.3 bar and Δp = 1 bar

Application example

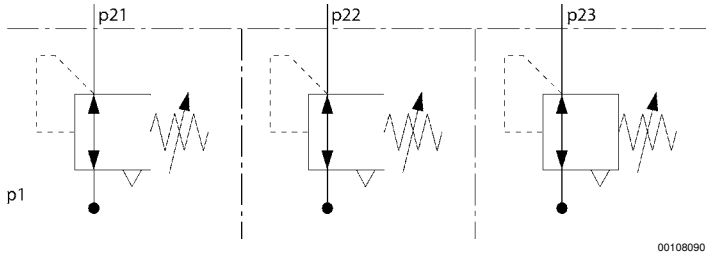

p1 = working pressure
p21; p22; p23 = secondary pressure

Preparation of compressed air → Maintenance units and components

Pressure regulator, Series AS1-RGS-...-DS

► G 1/4 ► Air supply: left ► Qn=1000 l/min ► Activation: manual ► with continuous pressure supply

Pressure characteristics curve

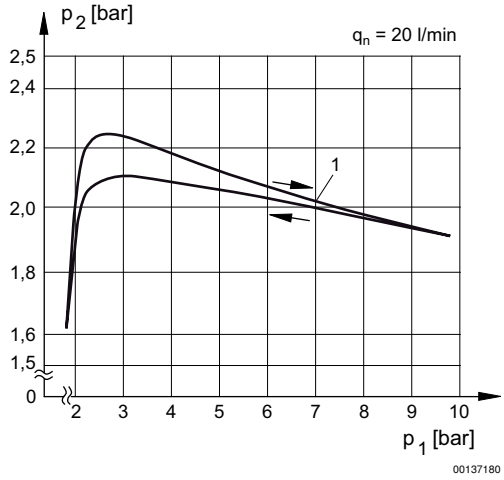

p1 = Working pressure
p2 = Secondary pressure
qn = Nominal flow
1 = Starting point

Flow rate characteristic

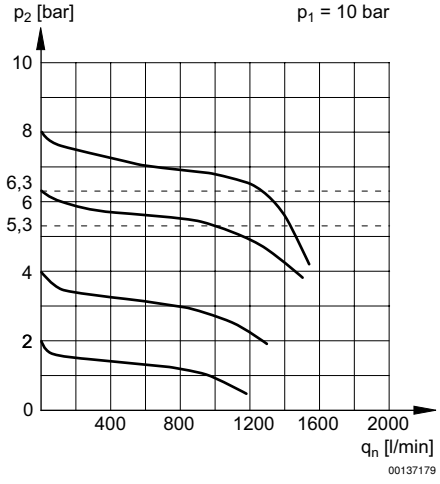

p1 = Working pressure
p2 = Secondary pressure
qn = Nominal flow

Preparation of compressed air → Maintenance units and components

Pressure regulator, Series AS1-RGS-...-DS

► G 1/4 ► Air supply: left ► Qn=1000 l/min ► Activation: manual ► with continuous pressure supply

Dimensions, Fig. 1

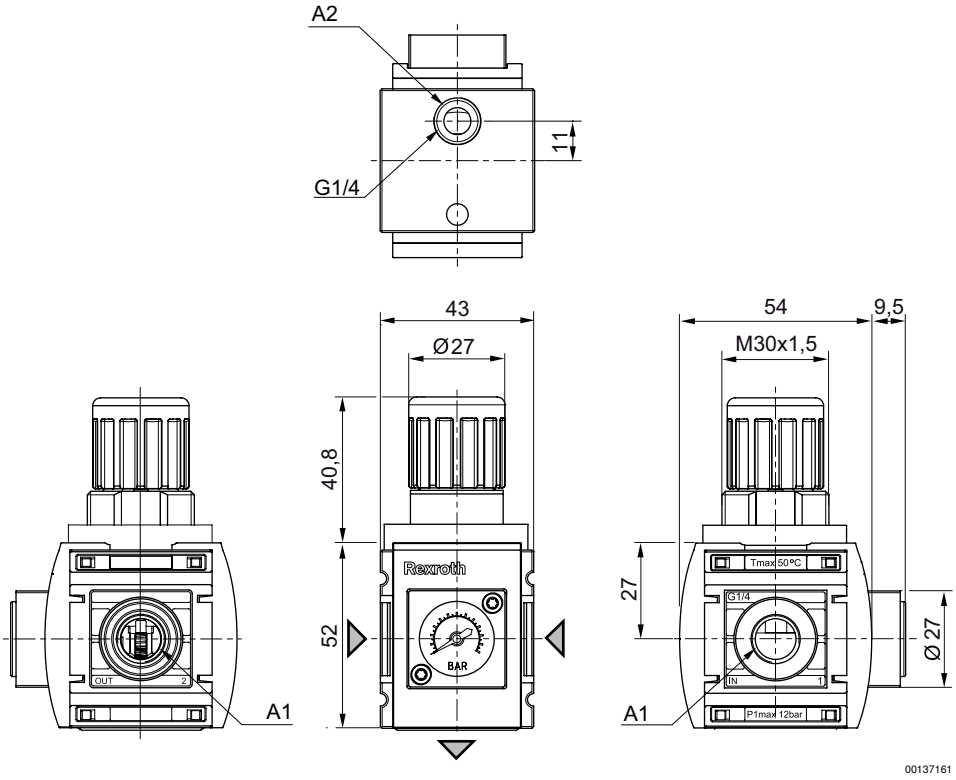

A1 = input
A2 = output

Preparation of compressed air → Maintenance units and components

Pressure regulator, Series AS1-RGS-...-DS

► G 1/4 ► Air supply: left ► Qn=1000 l/min ► Activation: manual ► with continuous pressure supply

Dimensions, Fig. 2

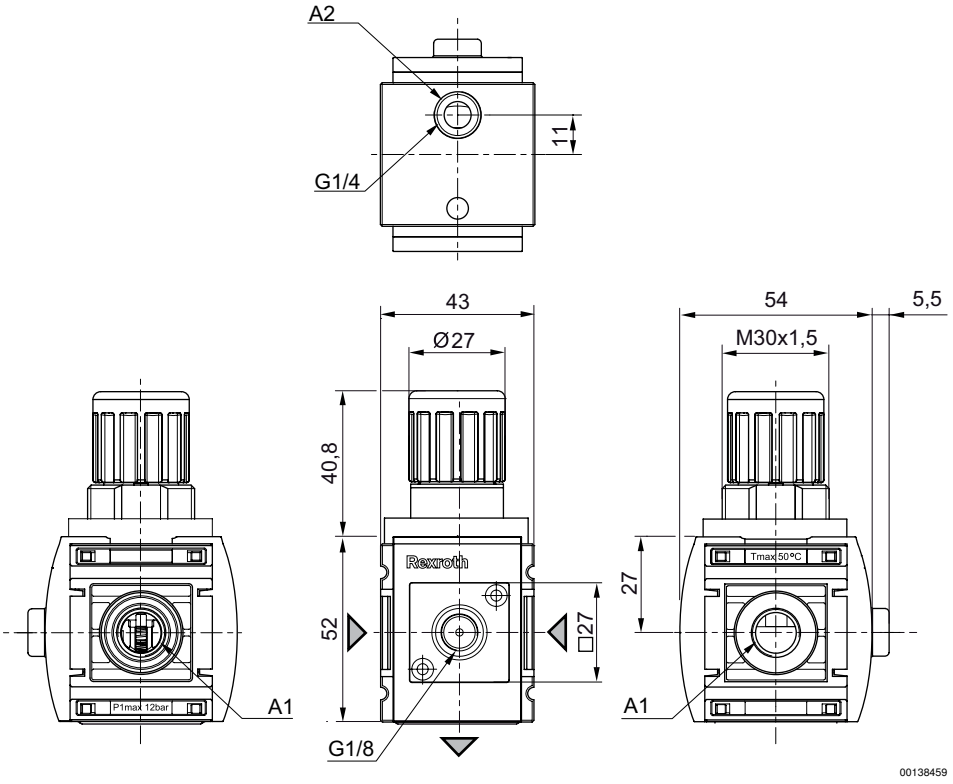

A1 = input
A2 = output