Preparation of compressed air → Maintenance units and components

3/2-shut-off valve, mechanically operated, Series AS1-BAV

► G 1/4 ► Air supply: right

00137244

Version	Ball valve, Can be assembled into blocks for padlocks lockable
Working pressure min./max.	0 bar / 12 bar
Medium	Compressed air
Medium temperature min./max.	-10°C / +50°C
Ambient temperature min./max.	-10°C / +50°C
Actuating element	rotary switch
Max. particle size	25 µm
Materials:	
Housing	Polyamide
Front plate	Acrylonitrile butadiene styrene
Seals	Acrylonitrile Butadiene Rubber
Actuating element	Polyoxymethylene

Technical Remarks

- The pressure dew point must be at least 15 °C under ambient and medium temperature and may not exceed 3 °C.

	Port	Exhaust	Qn		Weight	Part No.
			1►2	2►3		
			[l/min]		[kg]	
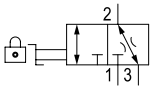	G 1/4	G 1/4	2600	380	0.15	**R412014742**
Nominal flow Qn at p1 = 6.3 bar and Δp = 1 bar						

Flow rate characteristic

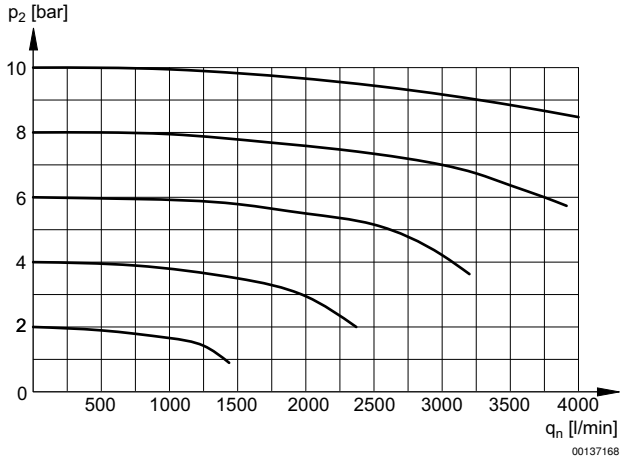

p2 = secondary pressure
qn = nominal flow

3/2-shut-off valve, mechanically operated, Series AS1-BAV

► G 1/4 ► Air supply: right

Rear exhaust

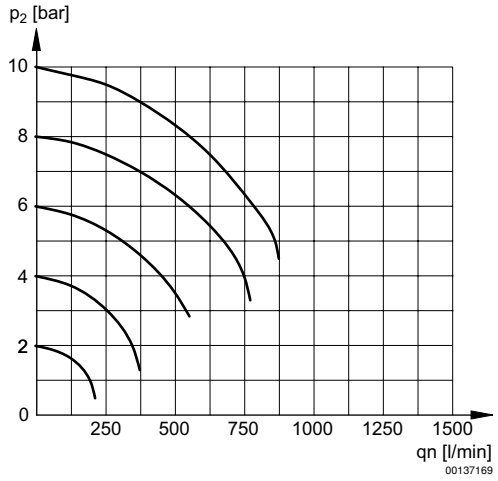

p2 = secondary pressure
qn = nominal flow

Dimensions

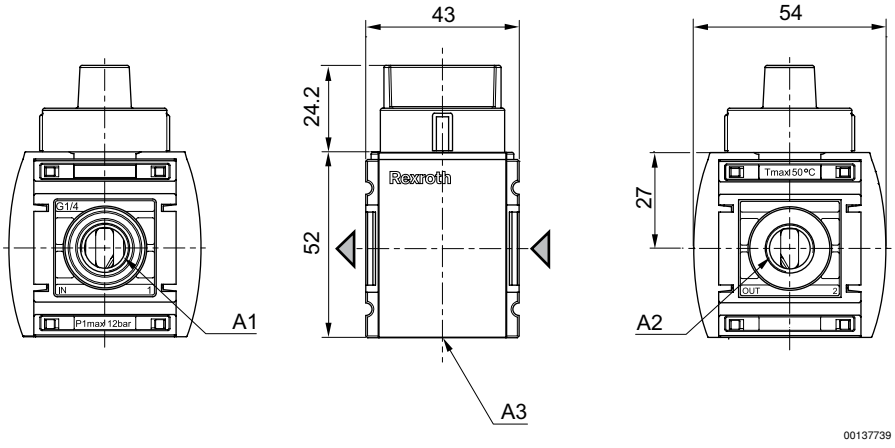

A1 = input
A2 = output
A3 = ventilation port