Preparation of compressed air → Maintenance units and components

Pre-filter, Series AS1-FLP

► G 1/4 ► Air supply: left ► filter porosity: 0.3 µm

00137253

Version	Pre-filter, Can be assembled into blocks
Mounting orientation	vertical
Working pressure min./max.	1.5 bar / 12 bar
Medium	Compressed air
Medium temperature min./max.	-10°C / +50°C
Ambient temperature min./max.	-10°C / +50°C
Filter reservoir volume	12 cm³
Filter element	exchangeable
filter porosity	0.3 µm
Condensate drain	See table below
Materials:	
Housing	Polyamide
Front plate	Acrylonitrile butadiene styrene
Seals	Acrylonitrile Butadiene Rubber
Filter insert	Paper

Technical Remarks
■ The pressure dew point must be at least 15 °C under ambient and medium temperature and may not exceed 3 °C.
■ max. residual oil content at the outlet: 1 mg/m³
■ solid impurities in the compressed air at the outlet as per ISO 8573-1: class 2

	Port	Qn	Condensate drain	Reservoir	Protective guard	Weight	Part No.
		[l/min]				[kg]	
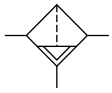	G 1/4	350	semi-automatic, open without pressure	Polycarbonate	-	0.169	R412014607
			fully automatic, open without pressure	Polycarbonate	-	0.187	**R412014608**
			fully automatic, closed without pressure	Polycarbonate	-	0.187	R412014609
			semi-automatic, open without pressure	Polycarbonate	metal	0.202	R412014610
			semi-automatic, open without pressure	metal	-	0.246	R412014611
			fully automatic, open without pressure	metal	-	0.258	R412014612
			fully automatic, closed without pressure	metal	-	0.258	R412014613
Nominal flow Qn at 6.3 bar and Δp = 0.1 bar							

Pre-filter, Series AS1-FLP

► G 1/4 ► Air supply: left ► filter porosity: 0.3 µm

Flow rate characteristic

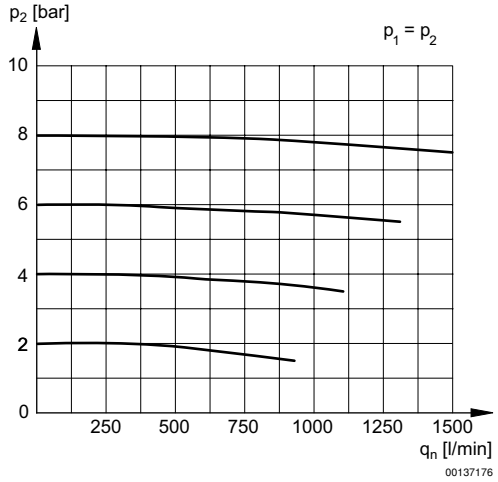

p2 = secondary pressure
qn = nominal flow

Preparation of compressed air → Maintenance units and components

Pre-filter, Series AS1-FLP

► G 1/4 ► Air supply: left ► filter porosity: 0.3 µm

Dimensions

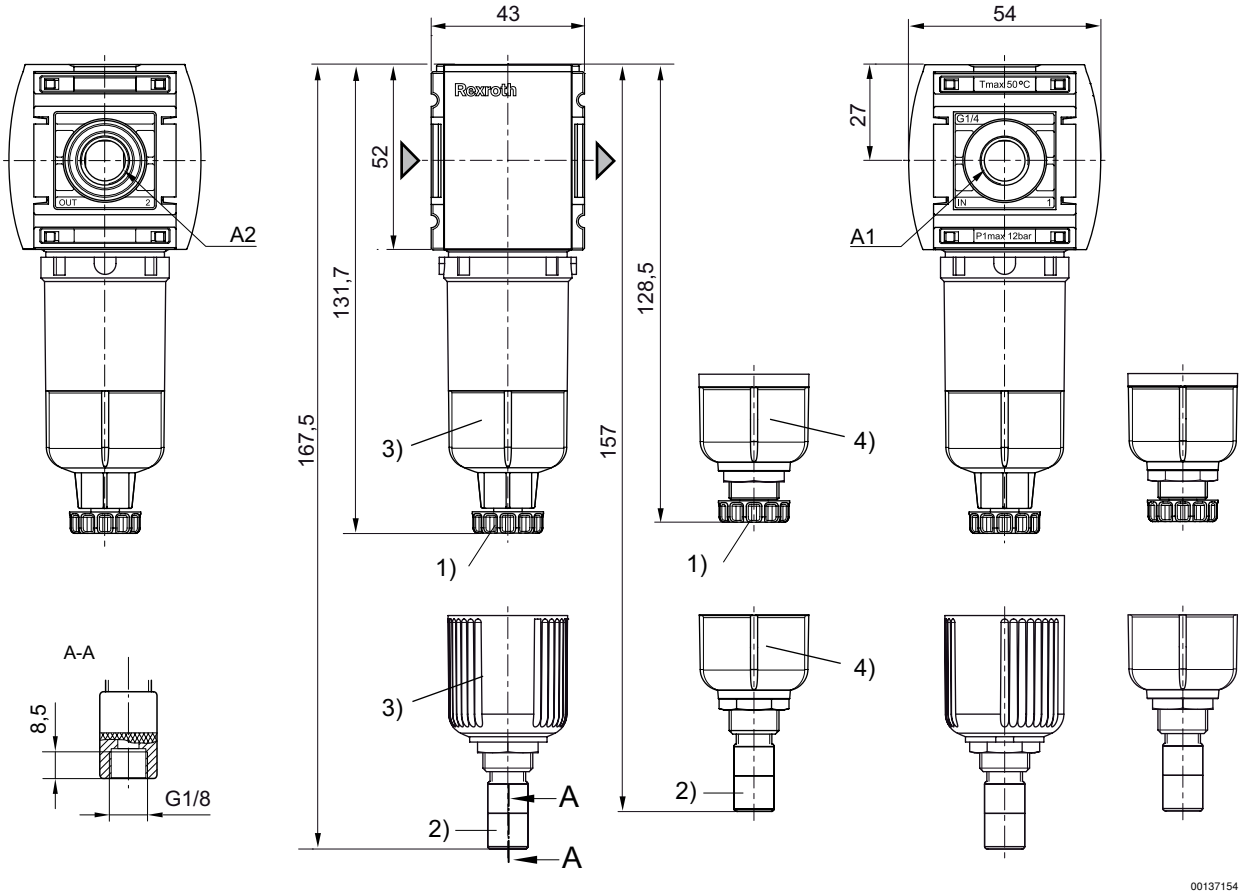

A1 = input
A2 = output
1) Semi-automatic condensate drain
2) fully automatic condensate drain
3) Reservoir: polycarbonate
4) Reservoir: metal