Piston rod cylinder → Standard cylinders

Profile cylinder, ISO 15552, Series PRA

► Ø 32 - 125 mm ► Ports: G 1/8 - G 1/2 ► double-acting ► with magnetic piston ► cushioning: elastic, adjustable, pneumatically ► Piston rod: through, external thread

00134198

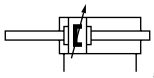

a17

Standards	ISO 15552
Compressed air connection	internal thread
Working pressure min./max.	1.5 bar / 10 bar
Ambient temperature min./max.	-20°C / +80°C
Medium temperature min./max.	-20°C / +80°C
Medium	Compressed air
Max. particle size	50 µm
Oil content of compressed air	0 mg/m³ - 5 mg/m³
Pressure for determining piston forces	6,3 bar

Materials:	
Cylinder tube	Aluminum, anodized
Piston rod	Stainless steel
Front cover	Die-cast aluminum
End cover	Die-cast aluminum
Seal	Polyurethane
Nut for piston rod	Steel, galvanized
Scraper	Polyurethane

Technical Remarks

- The pressure dew point must be at least 15 °C under ambient and medium temperature and may not exceed 3 °C.
- The oil content of compressed air must remain constant during the life cycle.
- Use only the approved oils from Bosch Rexroth, see chapter „Technical information“.

Piston Ø		**[mm]**	**32**	**40**	**50**	**63**	**80**
Retracting piston force		[N]	435	660	1035	1765	2855
Extracting piston force		[N]	435	660	1035	1765	2855
Cushioning length		[mm]	16.5	15	17	16.5	19.5
Cushioning energy		[J]	4.8	9	15	27	54
Weight	0 mm stroke	[kg]	0.58	0.8	1.34	1.72	2.92
	+10 mm stroke	[kg]	0.031	0.048	0.072	0.079	0.124
Stroke max.		[mm]	1500	1500	1500	1500	1500

Piston Ø		**[mm]**	**100**	**125**			
Retracting piston force		[N]	4635	7220			
Extracting piston force		[N]	4635	7220			
Cushioning length		[mm]	19.5	22			
Cushioning energy		[J]	88	140			
Weight	0 mm stroke	[kg]	4.08	8.92			
	+10 mm stroke	[kg]	0.139	0.22			
Stroke max.		[mm]	1500	1500			

Piston rod cylinder → Standard cylinders

Profile cylinder, ISO 15552, Series PRA

► Ø 32 - 125 mm ► Ports: G 1/8 - G 1/2 ► double-acting ► with magnetic piston ► cushioning: elastic, adjustable, pneumatically ► Piston rod: through, external thread

	Piston Ø **Piston rod thread** **Ports** **Piston rod Ø**	**32** **M10x1,25** **G 1/8** **12**	**40** **M12x1,25** **G 1/4** **16**	**50** **M16x1,5** **G 1/4** **20**	**63** **M16x1,5** **G 3/8** **20**	**80** **M20x1,5** **G 3/8** **25**
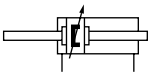	Stroke 25	**R480041413**	**R480041432**	R480041443	R480041453	R480041484
	50	**R480041419**	**R480041433**	**R480041444**	**R480041454**	**R480041485**
	80	**R480041420**	**R480041434**	**R480041445**	**R480041455**	R480041487
	100	**R480041421**	R480041435	**R480041446**	R480041456	R480041488
	125	R480041422	R480041436	**R480041074**	**R480041457**	**R480041490**
	160	R480041423	R480041437	**R480041447**	**R480041458**	R480041491
	200	**R480041425**	**R480041438**	**R480041448**	**R480041459**	R480041492
	250	R480041426	R480041439	R480041449	R480041460	R480041493
	320	R480041427	R480041440	R480041450	R480041461	R480041494
	400	**R480041428**	R480041441	R480041451	R480041481	-
	500	R480041429	R480041442	R480041452	R480041482	R480041497
	Piston Ø **Piston rod thread** **Ports** **Piston rod Ø**	**100** **M20x1,5** **G 1/2** **25**	**125** **M27x2** **G 1/2** **32**			
	Stroke 25	R480148059	R480148066			
	50	**R480069994**	R480148067			
	80	R480148061	R480148068			
	100	R480059815	R480142910			
	125	R480146278	R480148069			
	160	R480148062	R480148070			
	200	R480148063	R480148071			
	250	R480077546	R480148072			
	320	R480148064	R480148073			
	400	**R480148065**	R480148074			
	500	R480148060	R480148075			

Configurable product	
	This product is configurable. Please use our Internet configurator at www.boschrexroth.com/pneumatics or contact the nearest Bosch Rexroth sales office.

Piston rod cylinder → Standard cylinders

Profile cylinder, ISO 15552, Series PRA

► Ø 32 - 125 mm ► Ports: G 1/8 - G 1/2 ► double-acting ► with magnetic piston ► cushioning: elastic, adjustable, pneumatically ► Piston rod: through, external thread

Cushioning diagram

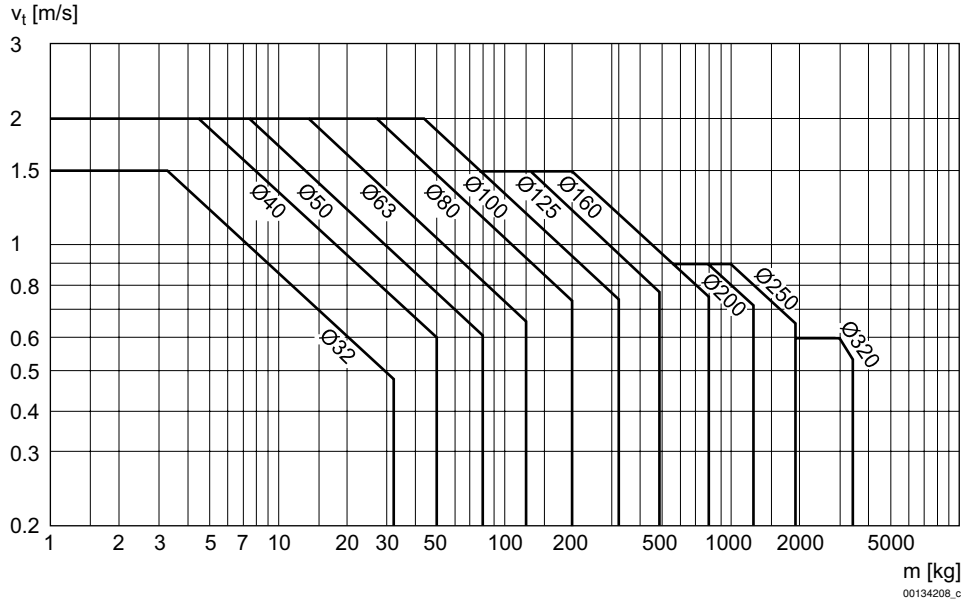

v = Piston velocity [m/s]
m = Cushionable mass [kg]

Dimensions

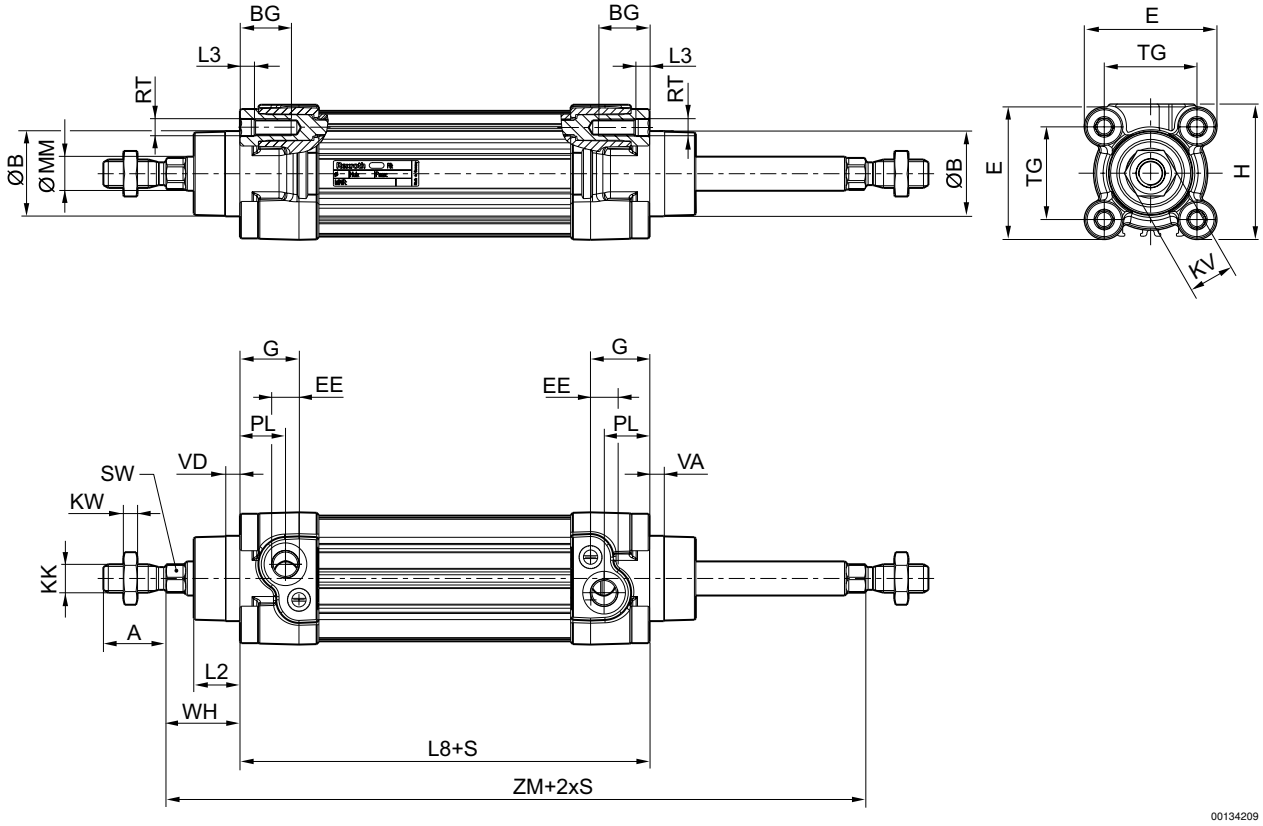

S = stroke

Piston rod cylinder → Standard cylinders

Profile cylinder, ISO 15552, Series PRA

► Ø 32 - 125 mm ► Ports: G 1/8 - G 1/2 ► double-acting ► with magnetic piston ► cushioning: elastic, adjustable, pneumatically ► Piston rod: through, external thread

Piston Ø	A -2	ØB d11	BG min.	E	EE	G	H	KK	KV	KW	ØMM f8
32	22	30	16	46.5	G 1/8	27.75	47.5	M10x1,25	16	5	12
40	24	35	16	53	G 1/4	33.25	53	M12x1,25	18	6	16
50	32	40	16	65	G 1/4	31	65	M16x1,5	24	8	20
63	32	45	16	75	G 3/8	31	75	M16x1,5	24	8	20
80	40	45	17	95	G 3/8	38.25	95	M20x1,5	30	10	25
100	40	55	17	115	G 1/2	38.25	115	M20x1,5	30	10	25
125	54	60	20	140	G 1/2	42.25	140	M27x2	41	13.5	32

Piston Ø	PL	L2	L3 ±0,5	L8	RT	SW	TG	VD	WH	ZM	
32	16	16.25	4.5	94±0,4	M6	10	32,5±0,5	5	26±1,4	146+3/-1,5	
40	20	18.25	4.5	105±0,7	M6	13	38±0,5	5	30±1,4	165+3/-1,5	
50	19	25	4.5	106±0,7	M8	17	46,5±0,6	5	37±1,4	180+3/-1,5	
63	24	25	4.5	121±0,8	M8	17	56,5±0,7	5	37±1,8	195+3/-1,5	
80	23.5	33	0	128±0,8	M10	22	72±0,7	5	46±1,8	220+3/-1,5	
100	25	36	0	138±1	M10	22	89±0,7	5	51±1,8	240+3,5/-2	
125	33	45	0	160±1	M12	27	110±1,1	7	65±2,2	290+3,5/-2	