Piston rod cylinder → Round cylinders

Round cylinder, Series ICS-D2-MP4

► Ø 32 - 100 mm ► double-acting ► with magnetic piston ► cushioning: pneumatically, adjustable ► corrosion-protected ► with rear end cover bushing ► suitable for use in food processing

00121765

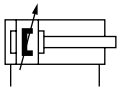

a15

Working pressure min./max.	1 bar / 10 bar
Ambient temperature min./max.	-25°C / +70°C
Medium temperature min./max.	-25°C / +70°C
Medium	Compressed air
Max. particle size	50 µm
Oil content of compressed air	0 mg/m³
Pressure for determining piston forces	6,3 bar

Materials:	
Cylinder tube	Stainless steel
Piston rod	Stainless steel
Front cover	Stainless steel
End cover	Stainless steel
Seal	Acrylonitrile Butadiene Rubber
Nut for piston rod	Stainless steel
Scraper	Polyethylene
Lubricant	ISO 21469 (NSF-H1)

Technical Remarks

- The pressure dew point must be at least 15 °C under ambient and medium temperature and may not exceed 3 °C.
- The oil content of compressed air must remain constant during the life cycle.
- Use only the approved oils from Bosch Rexroth, see chapter „Technical information“.
- Clamping piece for magnetic field sensor necessary

Piston Ø		**[mm]**	**32**	**40**	**50**	**63**	**80**
Retracting piston force		[N]	435	665	1039	1766	2857
Extracting piston force		[N]	507	792	1237	1964	3167
Cushioning length		[mm]	11.5	14	17	16	19
Cushioning energy		[J]	2.4	4.5	7.5	13.5	54
Weight	0 mm stroke	[kg]	0.6	1.2	1.7	3	4
	+10 mm stroke	[kg]	0.025	0.036	0.05	0.065	0.1
Stroke max.		[mm]	480	600	750	945	1200

Piston Ø		**[mm]**	**100**				
Retracting piston force		[N]	4639				
Extracting piston force		[N]	4948				
Cushioning length		[mm]	22				
Cushioning energy		[J]	88				
Weight	0 mm stroke	[kg]	7.7				
	+10 mm stroke	[kg]	0.135				
Stroke max.		[mm]	1500				

Configurable product

This product is configurable. Please use our Internet configurator at www.boschrexroth.com/pneumatics or contact the nearest Bosch Rexroth sales office.

Piston rod cylinder → Round cylinders

Round cylinder, Series ICS-D2-MP4

► Ø 32 - 100 mm ► double-acting ► with magnetic piston ► cushioning: pneumatically, adjustable ► corrosion-protected ► with rear end cover bushing ► suitable for use in food processing

Rear end cover bushing (ISO 6431), MP4, Piston Ø 32 - 100

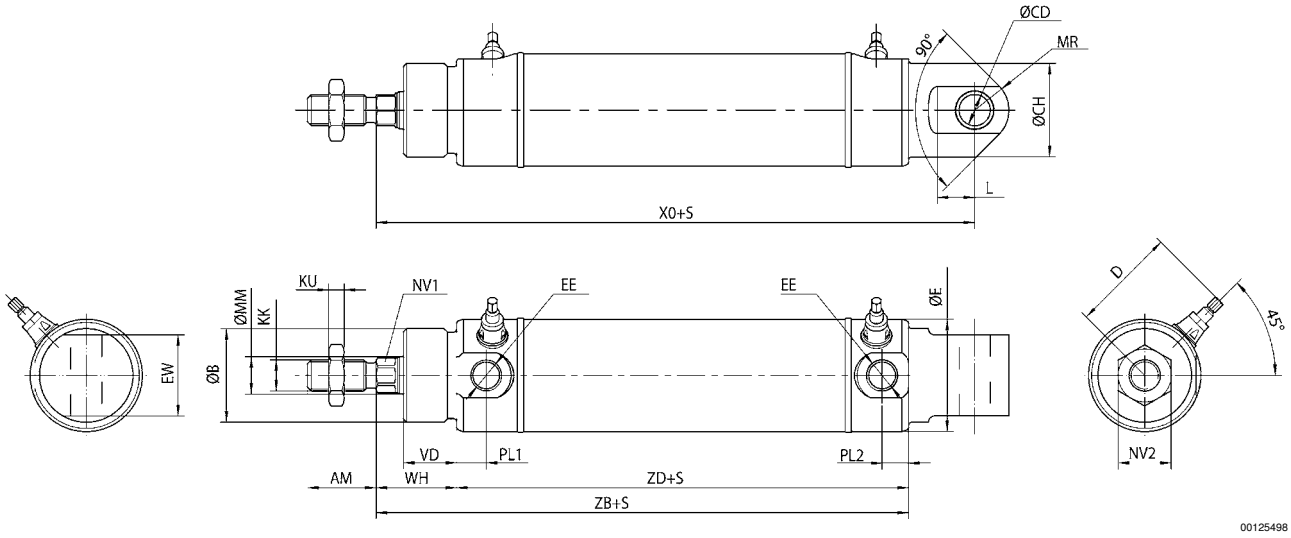

S = stroke, tolerance Ø 32–50 mm = +2/-0, Ø 63–100 mm = +2.5/-0. The cylinder is supplied with piston rod nuts in accordance with ISO 4035; DIN 439.

Ø	AM	Ø B e11	Ø CD H10	Ø CH	D 1)	Ø E	EE	EW	KK	KU	L 2)	MM g8	MR
32	22	30	10	30	34	36	G 1/8	26	M10x1,25	5	13	12	11
40	24	35	12	33	38	44	G 1/4	28	M12x1,25	6	12	16	13
50	32	40	12	36	50	54	G 1/4	32	M16x1,5	8	13	20	13
63	32	45	16	45	57	68	G 3/8	40	M16x1,5	8	15	20	17

Ø	NV1	NV2	PL1	PL2	VD	WH	XO	ZB	ZD				
32	10	17	9.5	8.5	17	26	142 ±1,3	121	95				
40	13	18	11	11	25	35	160 ±1,3	143	108				
50	17	24	12	12	25	35	170 ±1,3	150	115				
63	17	24	14	13.5	30	40	190 ±1,6	165	125				

1) max.
2) min.