Electrical connection technologies → Electrical connection technologies

Multipole plug D-Sub (25-pin)

00137718

Ambient temperature min./max.	-5°C / +50°C
Protection class	IP 65
Operational voltage DC, max.	24 V
Materials:	
Housing	Polyamide

Technical Remarks
■ The specified protection class is valid only in assembled and tested state.
■ Note for use with VS LP04: The plug can only be used in the LP04 versions with a side electrical connection.

Electrical interface	Cable exit	suitable cable-Ø min./max	Housing color	Weight	Fig.	Part No.
		[mm]		[kg]		
Socket (female) D-Sub 25-pin	straight 180° angled 90°	4 / 13	Black	0.112	Fig. 1	**R412011240**
Plug (male) D-Sub 25-pin	straight 180° angled 90°	4 / 13	Black	0.112	Fig. 2	R412011241
Scope of delivery: multipole plug including 1 tube nut and 1 elbow fitting						

Fig. 1

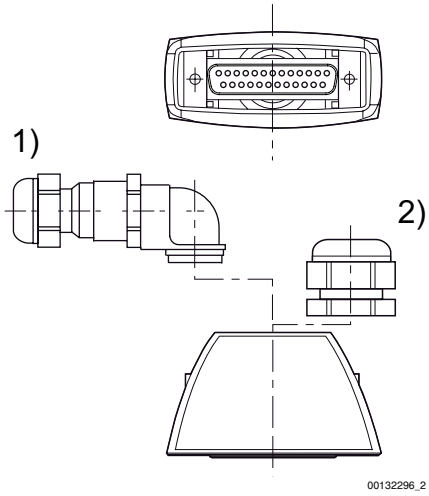

Fig. 2

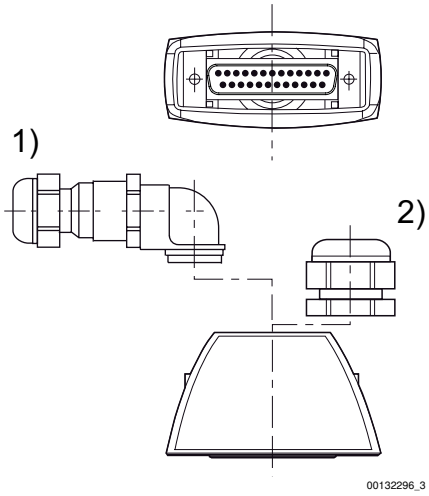

1) Elbow fitting
2) tube nut

Multipole plug D-Sub (25-pin)

Pin assignment	
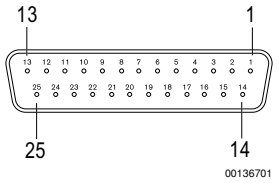 Socket (female)	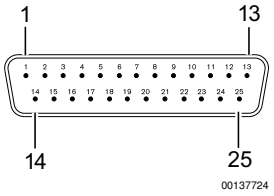 Plug (male)