Piston rod cylinder → Cylinder valve units

Cylinder valve units, CVI series with TRB cylinder series

► Ø 32 - 125 mm ► double-acting ► retracted or extended ► with magnetic piston ► cushioning: pneumatically ► ATEX optional ► For valve series: CD07, CD12, TC08, TC15, 740

00138847

Standards	ISO 15552
Connector standard	ISO 4400
Working pressure min./max.	See table below
Ambient temperature min./max.	See table below
Medium temperature min./max.	See table below
Medium	Compressed air
Max. particle size	50 μm
Oil content of compressed air	0 mg/m³ - 5 mg/m³
Pressure for determining piston forces	6,3 bar
Cylinder series	TRB
Cylinder type	Tie rod cylinder

Materials:	
Cylinder tube	Aluminum, anodized
Front cover	Aluminum
End cover	Aluminum
Piston rod	Stainless steel
Nut for piston rod	Steel, galvanized
Seals	Polyurethane
Connector	Brass, nickel-plated
Plastic tubing	Polyamide
Mounting plate	Aluminum
mounting screws	Steel galvanized
Scraper	Polyurethane

Technical Remarks

- The pressure dew point must be at least 15 °C under ambient and medium temperature and may not exceed 3 °C.
- The oil content of compressed air must remain constant during the life cycle.
- Use only the approved oils from Bosch Rexroth, see chapter „Technical information“.
- For technical data and valve materials, see the technical data for the cylinder valve unit and the configuration overview with a link to the valve catalog pages.
- ATEX-certified cylinder valve units can be generated for series CD07 and 740 using the Internet configurator.
- ATEX ID:Only mechanical components: II 2G2D EEx nC IIB T4 IP65 T125°C XWith electrical components: II 3G3D EEx nC IIB T4 IP65 T125°C XFor ATEX-certified cylinders, the stated temperature range does not apply, but instead: -10°C ≤ Ta ≤ 50°CFor the CD07 series with 5/3-way valve, the temperature range is 0°C ≤ Ta ≤ 50°C!
- NOTICE:For the part numbers 5727515302 and 5727565302 in the 740 series with 5/4-way valve, the minimum working pressure of 3 bar must be observed!

Cylinder valve units, CVI series with TRB cylinder series

► Ø 32 - 125 mm ► double-acting ► retracted or extended ► with magnetic piston ► cushioning: pneumatically ► ATEX optional ► For valve series: CD07, CD12, TC08, TC15, 740

Piston Ø		**[mm]**	**32**	**40**	**50**	**63**	**80**
Piston force	retracting	[N]	435	660	1035	1765	2855
	extracting	[N]	505	790	1235	1960	3165
Cushioning length	-	[mm]	11.5	15	17	16.5	19.5
Weight	0 mm stroke	[kg]	0.64	0.9	1.36	1.63	2.74
	+10 mm stroke	[kg]	0.02	0.03	0.04	0.05	0.06
Stroke max.	-	[mm]	1600	1900	2100	2500	2800

Piston Ø		**[mm]**	**100**	**125**			
Piston force	retracting	[N]	4635	7220			
	extracting	[N]	4945	7725			
Cushioning length	-	[mm]	19.5	22			
Weight	0 mm stroke	[kg]	3.8	7.56			
	+10 mm stroke	[kg]	0.07	0.21			
Stroke max.	-	[mm]	2800	2750			

Configurable product	
	This product is configurable. Please use our Internet configurator at www.boschrexroth.com/pneumatics or contact the nearest Bosch Rexroth sales office.

Technical data for the cylinder valve unit

Valve series	**Cylinders Ø [mm]**	**Tubing connection [mm]**	**Valve flow rate [l/min]**	**Operating pressure [bar]**	**°C****	**Weight* [kg]**
740	**32 - 125**	Ø8x1	700	1,5 / 3 - 10***	-15 - 50	0,19 - 0,27
740	**40 -125**	Ø10x1	950	1,5 / 3 - 10***	-15 - 50	0,19 - 0,28
TC08	**32 - 50**	Ø8x1	700 - 800	3 - 10	-10 - 50	0,15 - 0,19
CD07	**32 - 80** **40 - 125**	Ø8x1 Ø10x1	950 - 1200	3 - 10	-20 - 50**	0,50 - 0,58
TC15	**50 - 125**	Ø10x1	1300 - 1500	3 - 10	-10 - 50	0,24 - 0,29
CD12	**100 - 125** **80 - 125**	Ø10x1 Ø14x1,5	3800 - 4100	2 / 3 - 10***	-15 - 70	0,86 - 0,95

*Weight = weight of the assembly, consisting of valve, fitting, tubing and mountings. See above table for cylinder weight.
**°C = ambient and medium temperature. With 5/3-way valve, °C = 0 to 50
*** With 5/2-way valve: min. working pressure = 1.5 bar or 2 bar
With 5/3-way valve: min. working pressure = 3 bar

Piston rod cylinder → Cylinder valve units

Cylinder valve units, CVI series with TRB cylinder series

► Ø 32 - 125 mm ► double-acting ► retracted or extended ► with magnetic piston ► cushioning: pneumatically ► ATEX optional ► For valve series: CD07, CD12, TC08, TC15, 740

Dimensions of cylinder/valve unit with single solenoid valve

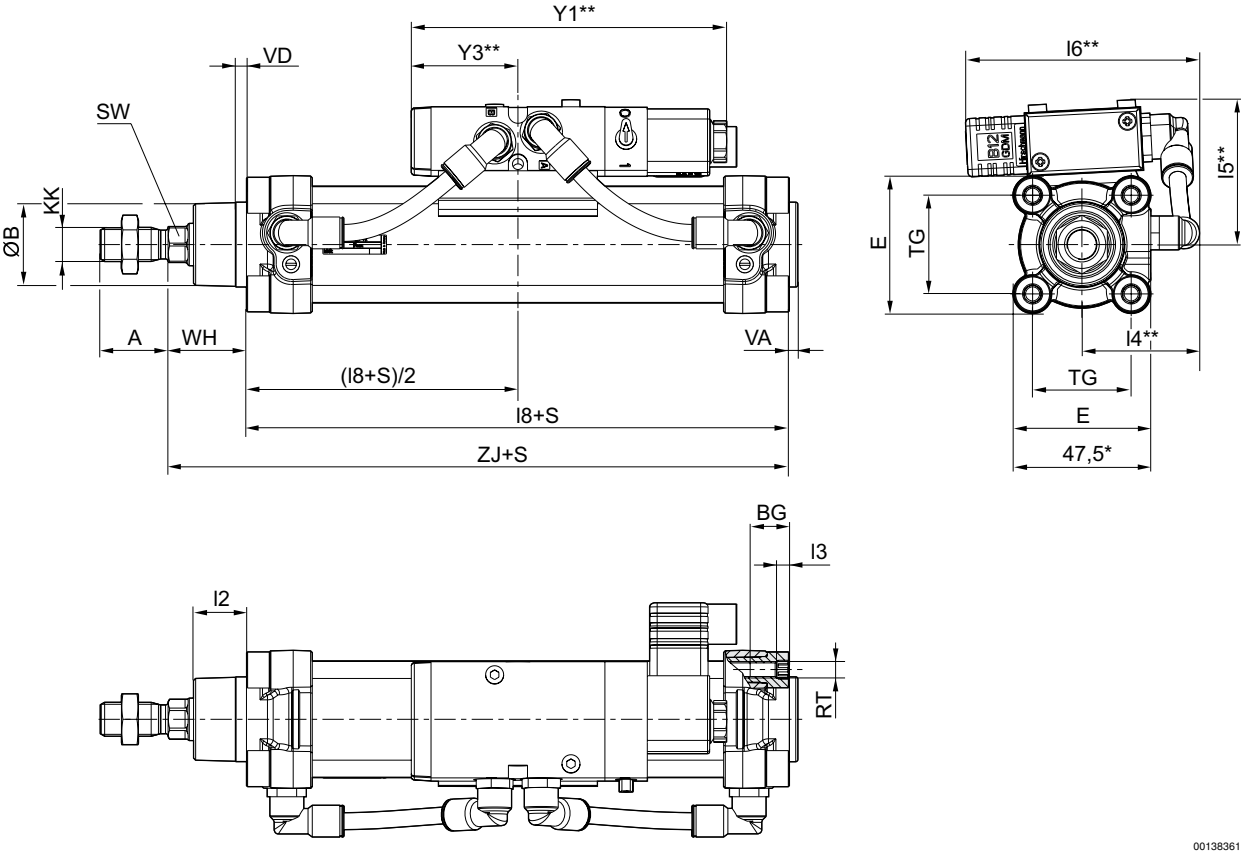

S = stroke
* Only for Ø32
** See valve dimensions

Piston rod cylinder → Cylinder valve units

Cylinder valve units, CVI series with TRB cylinder series

► Ø 32 - 125 mm ► double-acting ► retracted or extended ► with magnetic piston ► cushioning: pneumatically ► ATEX optional ► For valve series: CD07, CD12, TC08, TC15, 740

Dimensions of cylinder/valve unit with double solenoid valve

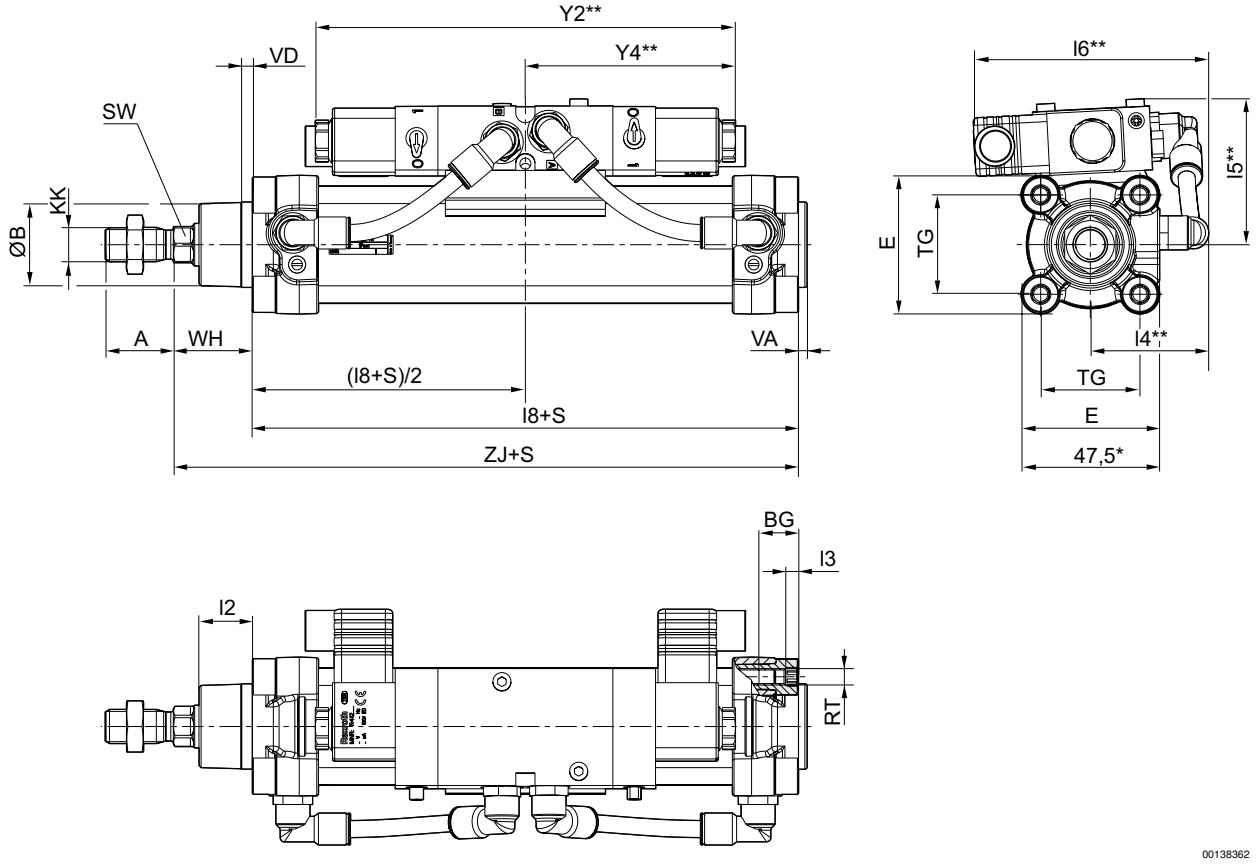

S = stroke
* Only for Ø32
** See valve dimensions

Ø	A -2	ØB d11	BG 1)	E	KK	l2	l3 2)	l8	RT	S	SW
32	22	30	16	46.5	M10x1,25	16.25	4.5	94±0,4	M6	40 1) / 1600 2)	10
40	24	35	16	53	M12x1,25	18.25	4.5	105±0,7	M6	40 1) / 1900 2)	13
50	32	40	16	65	M16x1,5	25	4.5	106±0,7	M8	40 1) / 2100 2)	17
63	32	45	16	75	M16x1,5	25	4.5	121±0,8	M8	40 1) / 2500 2)	17
80	40	45	17	95	M20x1,5	33	0	128±0,8	M10	40 1) / 2800 2)	22
100	40	55	17	115	M20x1,5	36	0	138±1	M10	40 1) / 2800 2)	22
125	54	60	20	140	M27x2	45	0	160±1	M12	40 1) / 2750 2)	27

Ø	TG	VA -1	VD 1)	WH	ZJ							
32	32,5±0,5	4	5	26±1,4	120							
40	38±0,5	4	5	30±1,4	135							
50	46,5±0,6	4	5	37±1,4	143							
63	56,5±0,7	4	5	37±1,8	158							
80	72±0,7	4	5	46±1,8	174							
100	89±0,7	4	5	51±1,8	189							
125	110±1,1	6	7	65±2,2	225							

1) Min.
2) Max.

Cylinder valve units, CVI series with TRB cylinder series

► Ø 32 - 125 mm ► double-acting ► retracted or extended ► with magnetic piston ► cushioning: pneumatically ► ATEX optional ► For valve series: CD07, CD12, TC08, TC15, 740

valve dimensions

CD07-Ø	Y1	Y2	Y3	Y4	l4	l5	l6					
32	149	198	50.5	98.5	51	64	111					
40	149	198	50.5	98.5	53	68	113					
50	149	198	50.5	98.5	60	73	114					
63	149	198	50.5	98.5	65	78	114					
80	149	198	50.5	98.5	78	92	118					
100	149	198	50.5	98.5	87	99	118					
125	149	198	50.5	98.5	99	109	120					
CD12-Ø	**Y1**	**Y2**	**Y3**	**Y4**	**l4**	**l5**	**l6**					
80	237	317	72	164.5	83	104	106					
120	237	317	72	164.5	90	115	106					
125	237	317	72	164.5	102	125	107					
TC08-Ø	**Y1**	**Y2**	**Y3**	**Y4**	**l4**	**l5**	**l6**					
32	147	214	43	104	48	50	62					
40	147	214	43	104	51	54	62					
50	147	214	43	104	56	59	65					
TC15-Ø	**Y1**	**Y2**	**Y3**	**Y4**	**l4**	**l5**	**l6**					
50	167	234	54	113	57	64	82					
63	167	234	54	113	63	69	82					
80	167	234	54	113	73	83	82					
100	167	234	54	113	84	90	82					
125	167	234	54	113	97	100	82					
740-Ø	**Y1**	**Y2**	**Y3**	**Y4**	**l4**	**l5**	**l6**					
32	120	187	33.5	86	51	69	113					
40	120	187	33.5	86	55	73	115					
50	120	187	33.5	86	61	78	117					
63	120	187	33.5	86	67	83	117					
80	120	187	33.5	86	78	96	120					
100	120	187	33.5	86	90	104	121					
125	120	187	33.5	86	100	114	123					