Field bus connections → Link structure DDL

DDL-X-Tool, V-design

► Optional tool to simplify commissioning of DDL components

00136705

Ambient temperature min./max.	+5°C / +50°C
Protection class, with plug	IP 20
Operational voltage electronics	24 V DC
Electronics voltage tolerance	-20% / +20%
Operational voltage valves	24 V DC
Total output for valves	2.5 A

Technical Remarks

- The DDL-X-Tool is used to test and control DDL components, if field bus communication is not yet available (master function), or for observation purposes during field bus operation (viewer function).
- Suitable for all DDL components from Bosch Rexroth.
- A PC is required for operation.System requirements: PIII processor with 800 MHz, 256 MB RAM, USB interface, CD-ROM drive, Microsoft Windows 98SE, 2000, or XP operating system.
- The DDL-X-Tool is a diagnostic tool and should not permanently remain in the DDL line.

Weight [kg]	Part No.
3.1	R412008352

Scope of delivery:
1 DDL-X-Tool
1 USB adapter
1 USB adapter manual
1 driver CD-ROM
1 installation manual
1 9-pin D-SUB cable, 1 m
1 power pack 24 V DC, 2.5 A
3 mains plug cables for the power pack (EU, GB, US)
1 CD-ROM with software for DDLfWin master, DDLfWin viewer and operating instructions
1 DDLfWin installation instructions
1 case with foam inlay

Field bus connections → Link structure DDL

DDL-X-Tool, V-design

► Optional tool to simplify commissioning of DDL components

DDL-X-Tool connections

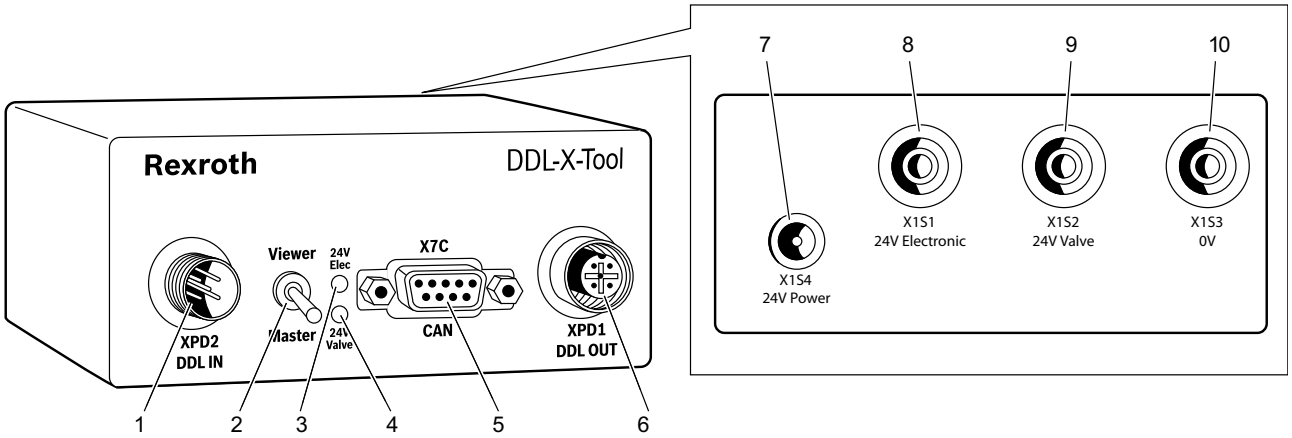

00136702

1) Integrated plug (DDL line coming from the bus module)
2) Selector switch (master/viewer mode)
3) LED
4) LED
5) D-Sub plug (PC connection)
6) Integrated socket (DDL ling going to the modules)
7) Mains connection socket (for DDL supply of electronics and valves)
8) Integrated socket (separate supply for electronics, alternative to 7)
9) Integrated socket (separate supply for valves, emergency OFF, alternative to 7)
10) Integrated socket (ground, alternative to 7)

Master function to simplify commissioning

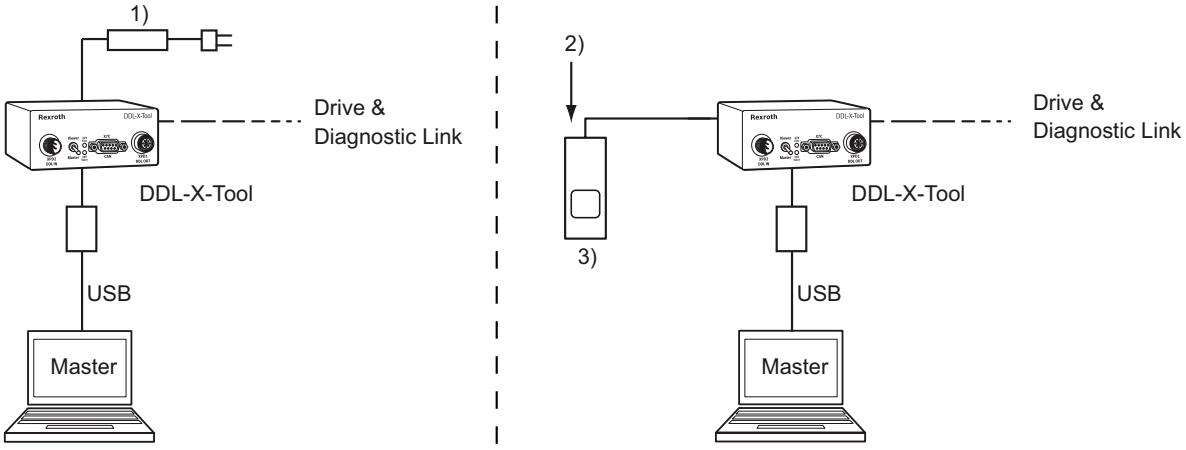

00136703

1) Power pack
2) Electronics 24 V/valves 24 V
3) Bus module
In the master function, all outputs from the components in the DDL line can be controlled and all inputs are visible.

Field bus connections → Link structure DDL

DDL-X-Tool, V-design

► Optional tool to simplify commissioning of DDL components

Viewer function for observation purposes during field bus operation

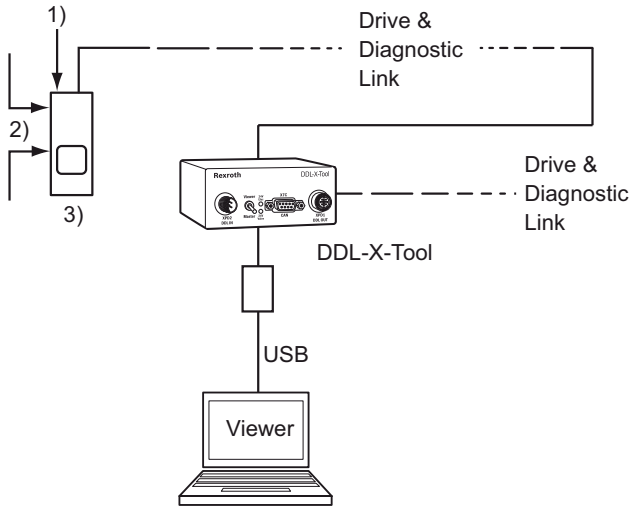

1) Electronics 24 V/valves 24 V
2) Field bus
3) Bus module
In the viewer function, the DDL-X-Tool displays all inputs and outputs from the components in the DDL line.