Directional valves → Electrically operated

5/2-directional valve, Series TC08

► Qn = 800 l/min ► Pilot valve width: 15 mm ► pipe connection ► compressed air connection output: G 1/8 ► Electr. connection: Plug, M8, 4-pin ► Manual override: with detent ► single solenoid, double solenoid

00138006

Version	Spool valve, zero overlap
Sealing principle	Soft sealing
Mounting on manifold strip	P-strip
Working pressure min./max.	See table below
Control pressure min./max.	See table below
Ambient temperature min./max.	-10°C / +50°C
Medium temperature min./max.	-10°C / +50°C
Medium	Compressed air
Max. particle size	5 µm
Oil content of compressed air	0 mg/m³ - 5 mg/m³
Connector standard	DIN EN 60947-5-2
Protection class acc. to DIN EN 61140 electrically	Class III
Degree of protectionwith electrical connector/plug	IP 65
Status display LED	Yellow
Duty cycle	100 %
mounting screw tightening torque	2 Nm
Weight	See table below
Materials:	
Housing	Polyamide, fiber-glass reinforced
Seals	Acrylonitrile Butadiene Rubber; Polyurethane
Front plate	Polyamide, fiber-glass reinforced

Technical Remarks
■ The pressure dew point must be at least 15 °C under ambient and medium temperature and may not exceed 3 °C.
■ The oil content of compressed air must remain constant during the life cycle.
■ Use only the approved oils from Rexroth Pneumatics, see chapter „Technical information“.

Operating voltage	Voltage tolerance	Power consumption
DC	DC	DC
		W
24 V	-10% / +10%	2.2

	MO	Compressed air connection			Operating voltage	Flow conductance		Flow rate value	Nominal resistance	Working pressure min./max.	Part No.
		Input	Output	Exhaust	DC	b	C	Qn			
							[l/(s*bar)]	[l/min]		[bar]	
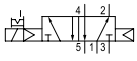		G 1/8	G 1/8	G 1/8	24 V	0.36	3.5	800	280	2.5 / 10	0820060201
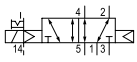		G 1/8	G 1/8	G 1/8	24 V	0.36	3.5	800	280	-0.9 / 10	**0820060251**

Part numbers marked in bold are available from the central warehouse in Germany, see the shopping basket for more detailed information

Pneumatics catalog, online PDF, as of 2013-11-28, © Bosch Rexroth Pneumatics GmbH, subject to change

Directional valves → Electrically operated

5/2-directional valve, Series TC08

► Qn = 800 l/min ► Pilot valve width: 15 mm ► pipe connection ► compressed air connection output: G 1/8
► Electr. connection: Plug, M8, 4-pin ► Manual override: with detent ► single solenoid, double solenoid

	MO	Compressed air connection			Operating voltage	Flow conductance		Flow rate value	Nominal resistance	Working pressure min./max.	Part No.
		Input	Output	Exhaust	DC	b	C	Qn			
							[l/(s*bar)]	[l/min]		[bar]	
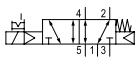		G 1/8	G 1/8	G 1/8	24 V	0.36	3.5	800	280	3 / 10	**0820060211**
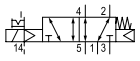		G 1/8	G 1/8	G 1/8	24 V	0.36	3.5	800	280	-0.9 / 10	**0820060261**
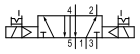		G 1/8	G 1/8	G 1/8	24 V	0.36	3.5	800	280	2 / 10	**0820060221**
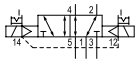		G 1/8	G 1/8	G 1/8	24 V	0.36	3.5	800	280	-0.9 / 10	**0820060271**

Part No.	Control pressure min./max.	Switch-on time	Switch-off time	Weight	Note
	[bar]	[ms]	[ms]	[kg]	
0820060201	2.5 / 10	14	18	0.14	1)
0820060251	2.5 / 10	14	18	0.14	2)
0820060211	3 / 10	14	17	0.14	1)
0820060261	3 / 10	14	17	0.14	2)
0820060221	2 / 10	10	10	0.172	1)
0820060271	2 / 10	10	10	0.172	2)

HHB = Manual override
1) Pilot: internal
2) Pilot: External
push-in fitting: Brass, nickel-plated; Die cast zinc, chrome-plated
Nominal flow Qn at 6 bar and Δp = 1 bar

Directional valves → Electrically operated

5/2-directional valve, Series TC08

► Qn = 800 l/min ► Pilot valve width: 15 mm ► pipe connection ► compressed air connection output: G 1/8
► Electr. connection: Plug, M8, 4-pin ► Manual override: with detent ► single solenoid, double solenoid

Dimensions, single solenoid

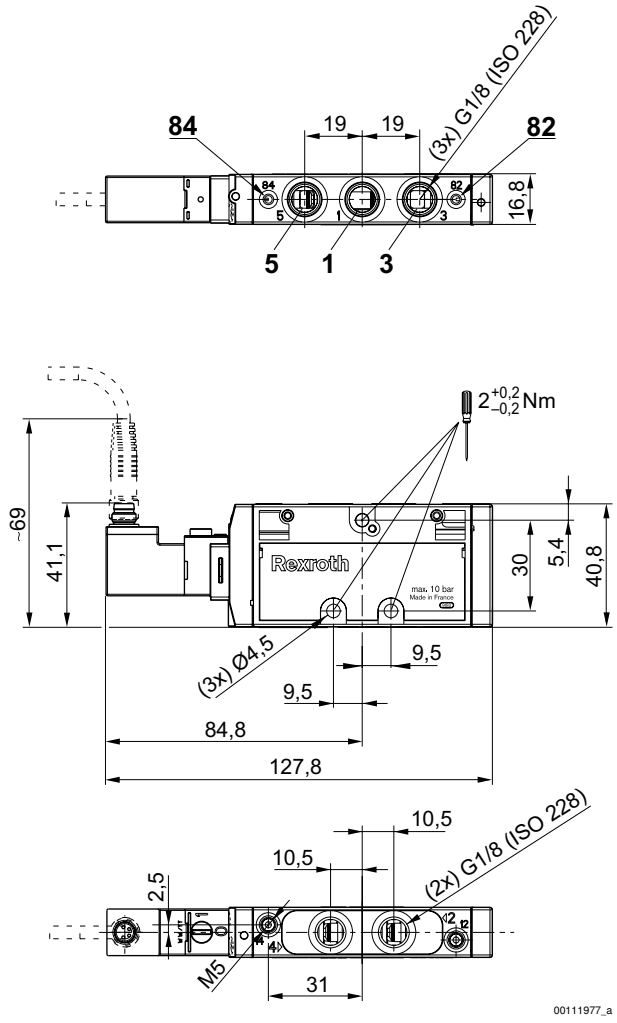

Directional valves → Electrically operated

5/2-directional valve, Series TC08

► Qn = 800 l/min ► Pilot valve width: 15 mm ► pipe connection ► compressed air connection output: G 1/8
► Electr. connection: Plug, M8, 4-pin ► Manual override: with detent ► single solenoid, double solenoid

Dimensions, double solenoid

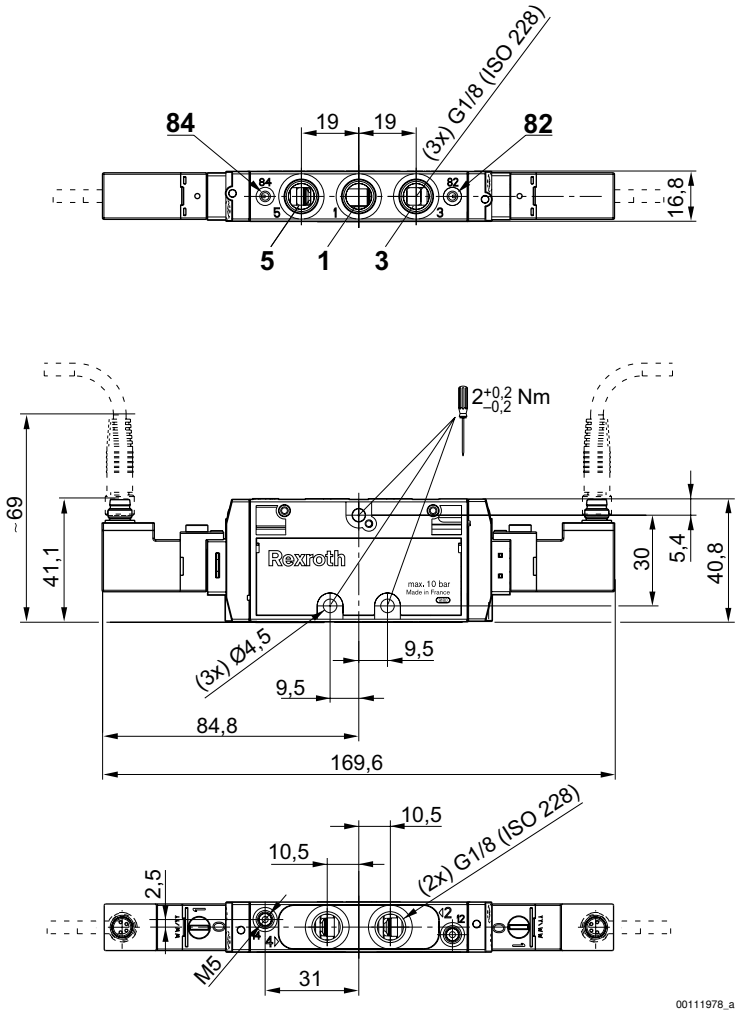

PIN assignment and cable colors for electrical connector

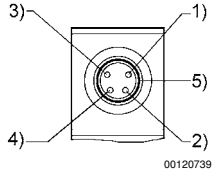

PIN assignment:
1) PIN not assigned
2) PIN not assigned
3) 0 V
4) 24 V
5) LED
Cable colors
1) Brown
2) White
3) Blue
4) Black