Piston rod cylinder → Standard cylinders

ISO 15552, Series TRB

► Ø 32 - 125 mm ► Ports: G 1/8 - G 1/2 ► double-acting ► with magnetic piston ► cushioning: elastic, adjustable, pneumatically ► with trunnion mounting ► Piston rod: external thread

00134196_a

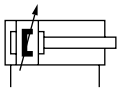

a15

Standards	ISO 15552
Compressed air connection	internal thread
Working pressure min./max.	1.5 bar / 10 bar
Ambient temperature min./max.	-20°C / +80°C
Medium temperature min./max.	-20°C / +80°C
Medium	Compressed air
Max. particle size	50 µm
Oil content of compressed air	0 mg/m³ - 5 mg/m³
Pressure for determining piston forces	6,3 bar
Materials:	
Cylinder tube	Aluminum, anodized
Piston rod	Stainless steel
Front cover	Die-cast aluminum
End cover	Die-cast aluminum
Seal	Polyurethane
Nut for piston rod	Steel, galvanized
Scraper	Polyurethane
Trunnion mounting	Nodular graphite iron, galvanized

Technical Remarks

- The pressure dew point must be at least 15 °C under ambient and medium temperature and may not exceed 3 °C.
- The oil content of compressed air must remain constant during the life cycle.
- Use only the approved oils from Bosch Rexroth, see chapter „Technical information“.
- NOTE:The orientation and position of the trunnion mounting in the center of the cylinder may not be changed!

Piston Ø		**[mm]**	**32**	**40**	**50**	**63**	**80**
Retracting piston force		[N]	435	660	1035	1765	2855
Extracting piston force		[N]	505	790	1235	1960	3165
Cushioning length		[mm]	16.5	19	17	16.5	19.5
Cushioning energy		[J]	4.8	9	15	27	54
Weight	0 mm stroke	[kg]	0.76	1.17	1.84	2.5	3.67
	+10 mm stroke	[kg]	0.024	0.03	0.036	0.052	0.06
Stroke max.		[mm]	1600	1900	2100	2500	2800
Tie-rods			Stainless steel	Stainless steel	Steel galvanized	Steel galvanized	Steel galvanized

Piston Ø		**[mm]**	**100**	**125**			
Retracting piston force		[N]	4635	7220			
Extracting piston force		[N]	4945	7725			
Cushioning length		[mm]	19.5	22			
Cushioning energy		[J]	88	140			
Weight	0 mm stroke	[kg]	5.86	10.62			
	+10 mm stroke	[kg]	0.065	0.21			
Stroke max.		[mm]	2800	2750			
Tie-rods			Steel galvanized	Steel galvanized			

Piston rod cylinder → Standard cylinders

ISO 15552, Series TRB

► Ø 32 - 125 mm ► Ports: G 1/8 - G 1/2 ► double-acting ► with magnetic piston ► cushioning: elastic, adjustable, pneumatically ► with trunnion mounting ► Piston rod: external thread

	Piston Ø **Piston rod thread** **Ports** **Piston rod Ø**	**32** **M10x1,25** **G 1/8** **12**	**40** **M12x1,25** **G 1/4** **16**	**50** **M16x1,5** **G 1/4** **20**	**63** **M16x1,5** **G 3/8** **20**	**80** **M20x1,5** **G 3/8** **25**
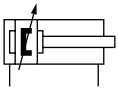	Stroke 80	0822340902	0822341902	**0822342902**	0822343902	0822344902
	100	0822340903	0822341903	0822342903	0822343903	0822344903
	125	0822340904	0822341904	0822342904	**0822343904**	**0822344904**
	160	0822340905	0822341905	0822342905	0822343905	0822344905
	200	0822340906	**0822341906**	**0822342906**	0822343906	0822344906
	250	0822340907	0822341907	0822342907	0822343907	0822344907
	320	0822340908	0822341908	0822342908	0822343908	0822344908
	400	0822340909	0822341909	0822342909	0822343909	0822344909
	500	0822340910	0822341910	0822342910	0822343910	0822344910
	Piston Ø **Piston rod thread** **Ports** **Piston rod Ø**	**100** **M20x1,5** **G 1/2** **25**	**125** **M27x2** **G 1/2** **32**			
	Stroke 80	0822345902	7472412312			
	100	0822345903	7472412319			
	125	0822345904	R480166294			
	160	0822345905	7472412341			
	200	0822345906	7472412342			
	250	0822345907	7472412343			
	320	0822345908	7472412344			
	400	0822345909	7472412345			
	500	0822345910	R480166072			

Configurable product	
	This product is configurable. Please use our Internet configurator at http://www.rexrothpneumatics.com or contact the nearest Bosch Rexroth sales office.

Piston rod cylinder → Standard cylinders

ISO 15552, Series TRB

► Ø 32 - 125 mm ► Ports: G 1/8 - G 1/2 ► double-acting ► with magnetic piston ► cushioning: elastic, adjustable, pneumatically ► with trunnion mounting ► Piston rod: external thread

Cushioning diagram

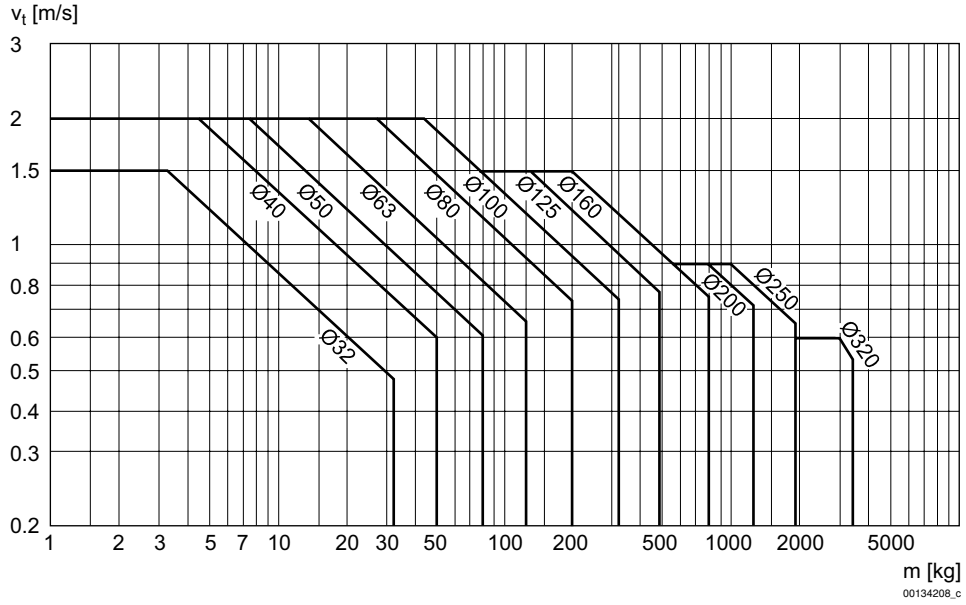

v = Piston velocity [m/s]
m = Cushionable mass [kg]

Dimensions

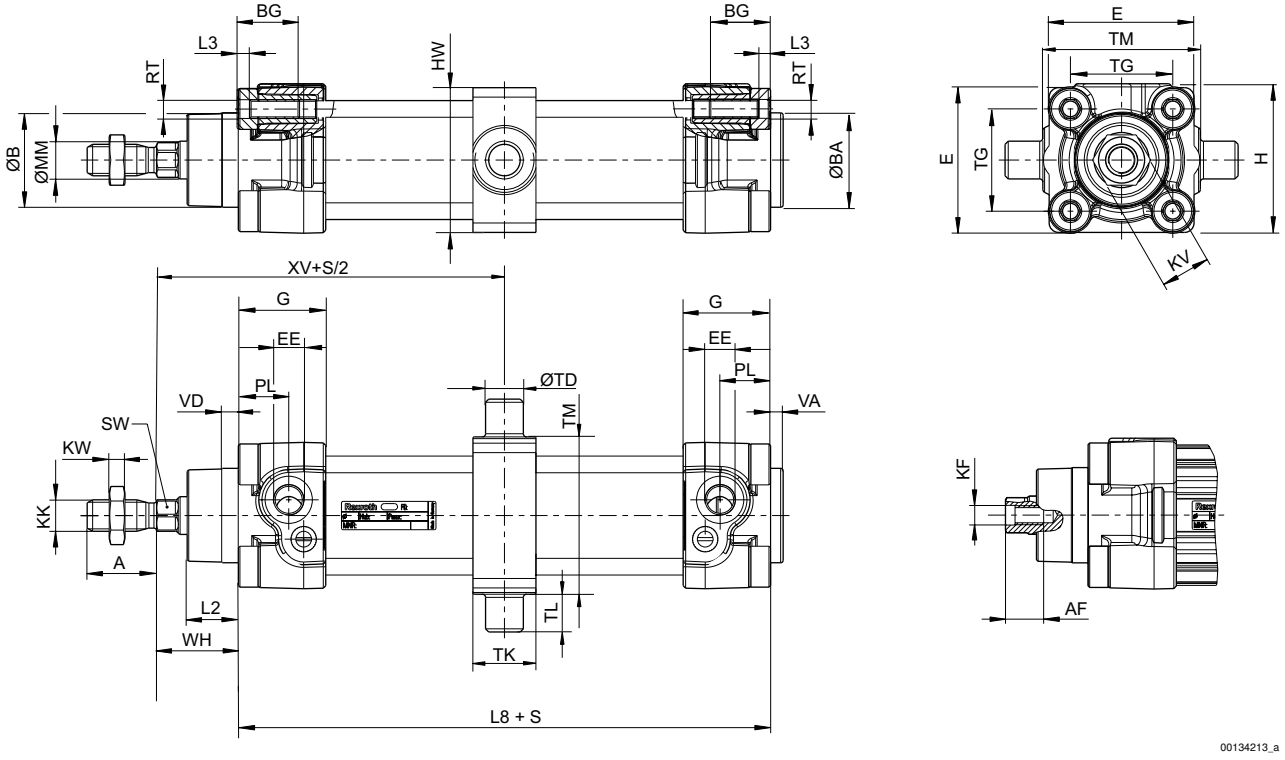

S = stroke

Piston rod cylinder → Standard cylinders

ISO 15552, Series TRB

► Ø 32 - 125 mm ► Ports: G 1/8 - G 1/2 ► double-acting ► with magnetic piston ► cushioning: elastic, adjustable, pneumatically ► with trunnion mounting ► Piston rod: external thread

Piston Ø	A -2	AF+1	ØB d11	ØBA d11	BG min.	E	EE	G	H	HW	KF
32	22	12	30	30	16	46.5	G1/8	27.75	47.5	56	M6
40	24	13.5	35	35	16	53	G1/4	33.25	53	59	M8
50	32	17	40	40	16	65	G1/4	31	65	69	M10
63	32	17	45	45	16	75	G3/8	38.25	75	84	M10
80	40	21	45	45	17	95	G3/8	38.25	95	102	M12
100	40	21	55	55	17	115	G1/2	42.25	115	125	M12
125	54	28	60	60	20	140	G1/2	53.85	140	160	M16

Piston Ø	KK	KV	KW	ØMM f8	PL	L2	L3 ±0,5	L8	RT	SW	TG
32	M10x1,25	16	5	12	16	16.25	4.5	94±0,4	M6	10	32,5±0,5
40	M12x1,25	18	6	16	20	18.25	4.5	105±0,7	M6	13	38±0,5
50	M16x1,5	24	8	20	19	25	4.5	106±0,7	M8	17	46,5±0,6
63	M16x1,5	24	8	20	24	25	4.5	121±0,8	M8	17	56,5±0,7
80	M20x1,5	30	10	25	23.5	33	0	128±0,8	M10	22	72±0,7
100	M20x1,5	30	10	25	25	36	0	138±1	M10	22	89±0,7
125	M27x2	41	13.5	32	33	45	0	160±1	M12	27	110±1,1

Piston Ø	VA -1	VD	WH	HW	ØTD e9	TK	TL h14	TM h14	XV			
32	4	5	26±1,4	46	12	20	12	50	73			
40	4	5	30±1,4	59	16	20	16	63	82.5			
50	4	5	37±1,4	69	16	25	16	75	90			
63	4	5	37±1,8	84	20	30	20	90	97.5			
80	4	5	46±1,8	102	20	35	20	110	110			
100	4	5	51±1,8	125	25	46	25	132	120			
125	6	7	65±2,2	160	25	50	25	160	145			