Gripper and vacuum technology → Vacuum accessories

Vacuum filter Inline, Series VFI

► Ø 4 - Ø 6 ► filter porosity: 50 µm

00134217

Version	Vacuum filter
Medium	Compressed air
Ambient temperature min./max.	+0°C / +50°C
Filter element	exchangeable
filter porosity	50 µm
Mounting	installing in piping
max. overpressure at 25° C	7 bar
max. overpressure at 50°C	5 bar
Max. vacuum level at p.opt	99 %
Materials:	
Housing	Polyamide
Seals	Acrylonitrile Butadiene Rubber
Filter insert	Polypropylene; Polyamide

Technical Remarks
■ suitable connections: plastic tubing made of polyurethane and polyethylene

	Port	Qn	Weight	Part No.
		[l/min]	[kg]	
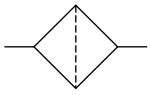	Ø 4	32	0.007	**R412010112**
	Ø 6	66	0.012	**R412010113**
Nominal flow at Δp = 40 mbar				

characteristics (flow volume)

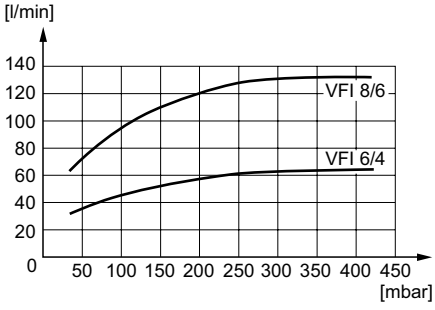

00133968

Gripper and vacuum technology → Vacuum accessories

Vacuum filter Inline, Series VFI

► Ø 4 - Ø 6 ► filter porosity: 50 µm

Dimensions

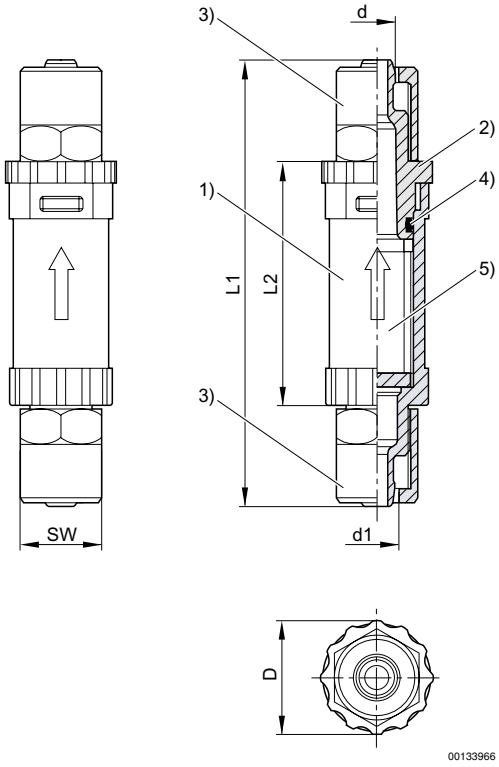

1) “transparent inline filter housing “
2) filter cover with bayonet catch
3) tube nut
4) O-ring
5) Filter

Part No.	Port G		d	d1	D	L1	L2	SW				
R412010112	Ø 4	VFI-6/4	4	6.2	16	62	34	12				
R412010113	Ø 6	VFI-8/6	6	8.2	23	70	41	14				