Piston rod cylinder →

Mini cylinder, ISO 6432, Series OCT

► Ø 12 - 25 mm ► Ports: M5 - G 1/8 ► double-acting ► with magnetic piston ► cushioning: pneumatically, adjustable ► with integrated rear eye ► Piston rod: non-rotating, external thread

00118479

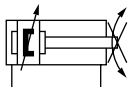

a64

Standards	ISO 6432
Compressed air connection	internal thread
Working pressure min./max.	1.5 bar / 10 bar
Ambient temperature min./max.	-20°C / +75°C
Medium temperature min./max.	-20°C / +75°C
Medium	Compressed air
Max. particle size	50 µm
Oil content of compressed air	0 mg/m³ - 5 mg/m³
Pressure for determining piston forces	6,3 bar

Materials:	
Cylinder tube	Aluminum, anodized
Piston rod	Stainless steel
Front cover	Polyarylamide
End cover	Polyarylamide
Seal	Polyurethane
Nut for cylinder mounting	Aluminum, anodized
Nut for piston rod	Stainless steel
Scraper	Polyester urethane rubber

Technical Remarks

- The pressure dew point must be at least 15 °C under ambient and medium temperature and may not exceed 3 °C.
- The oil content of compressed air must remain constant during the life cycle.
- Use only the approved oils from Bosch Rexroth, see chapter „Technical information“.
- Clamping piece for magnetic field sensor necessary

Piston Ø		**[mm]**	**12**	**16**	**20**	**25**
Retracting piston force		[N]	64	130	195	259
Extracting piston force		[N]	81	148	227	309
Cushioning length		[mm]	10	10	13	16
Cushioning energy		[J]	0.5	0.6	1.5	2.3
Weight	0 mm stroke	[kg]	0.058	0.07	0.122	0.168
	+10 mm stroke	[kg]	0.007	0.007	0.009	0.012
Stroke max.		[mm]	600	950	1100	1300

Supplementary products
Part numbers marked in bold are available from the central warehouse in Germany, see the shopping basket for more detailed information

Piston rod cylinder →

Mini cylinder, ISO 6432, Series OCT

► Ø 12 - 25 mm ► Ports: M5 - G 1/8 ► double-acting ► with magnetic piston ► cushioning: pneumatically, adjustable ► with integrated rear eye ► Piston rod: non-rotating, external thread

	Piston Ø Piston rod thread Ports Cylinder outer thread Torque for torsion protection, max.	12 M6 M5 M16x1,5 0.1	16 M6 M5 M16x1,5 0.15	20 M8 G 1/8 M22x1,5 0.25	25 M10x1,25 G 1/8 M22x1,5 0.4	
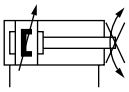	Stroke 10	R480049543	5283130020	5284130020	5285130020	
	25	R480049546	5283130050	**5284130050**	**5285130050**	
	50	R480047846	**5283130100**	**5284130100**	**5285130100**	
	80	R480049552	5283130160	**5284130160**	**5285130160**	
	100	R480049553	**5283130200**	5284130200	**5285130200**	
	125	R480049554	5283130250	5284130250	5285130250	
	160	R480049556	**5283130320**	**5284130320**	**5285130320**	
	200	R480049557	5283130400	**5284130400**	**5285130400**	
	250	R480049558	5283130500	5284130500	5285130500	
	320	R480049560	5283130640	5284130640	**5285130640**	
	400	R480049561	5283130800	5284130800	**5285130800**	
	500	R480049562	5283131000	5284131000	5285131000	

Configurable product	
	This product is configurable. Please use our Internet configurator at www.boschrexroth.com/pneumatics or contact the nearest Bosch Rexroth sales office.

Piston Ø 12 - 25

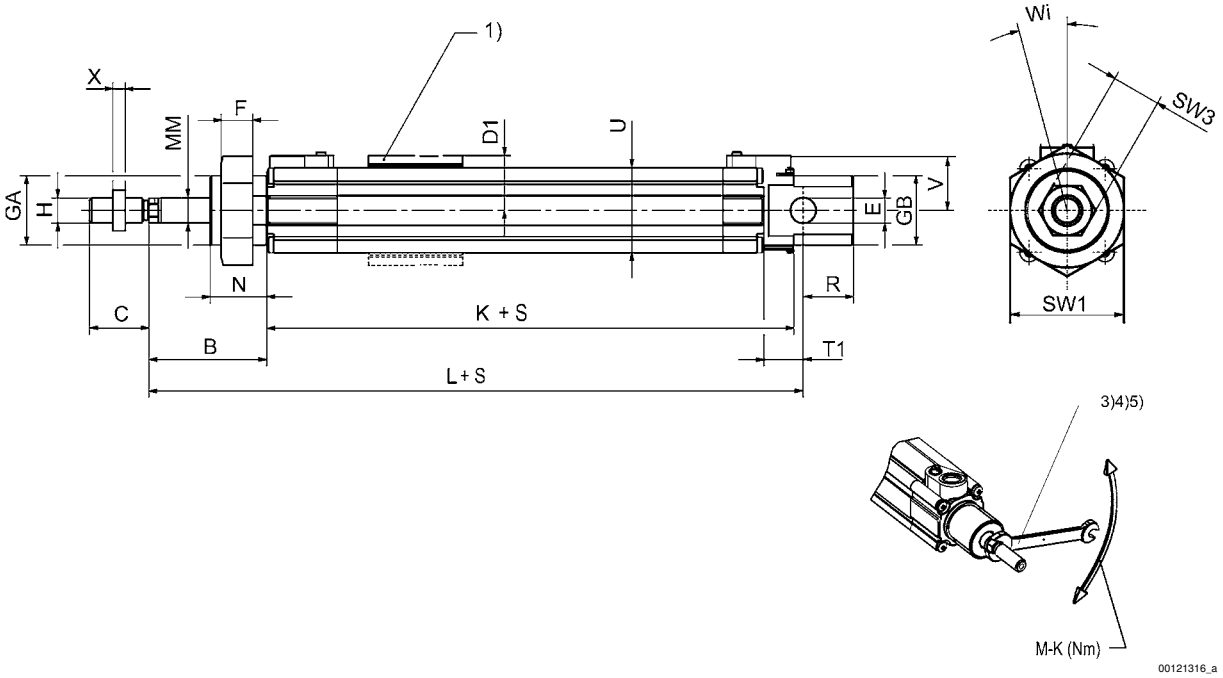

Supplementary products
Part numbers marked in bold are available from the central warehouse in Germany, see the shopping basket for more detailed information

Piston rod cylinder →

Mini cylinder, ISO 6432, Series OCT

► Ø 12 - 25 mm ► Ports: M5 - G 1/8 ► double-acting ► with magnetic piston ► cushioning: pneumatically, adjustable ► with integrated rear eye ► Piston rod: non-rotating, external thread

Piston Ø 12

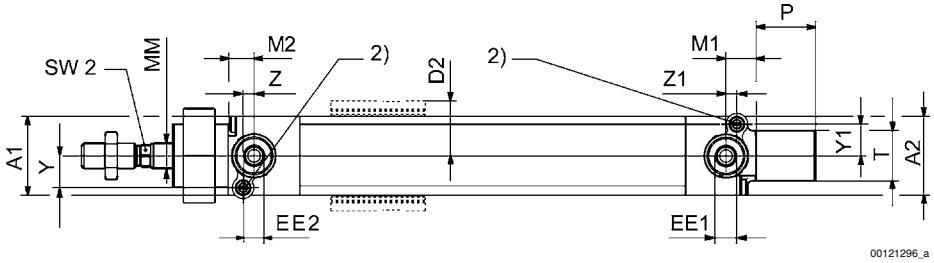

Piston Ø 16 - 25

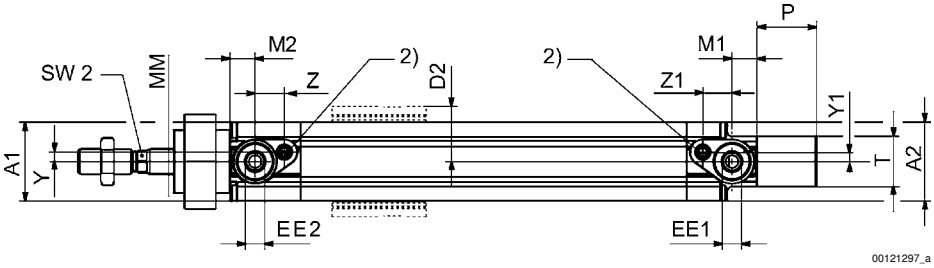

1) Clamp for sensor - installation at all 4 cylinder sides (Ø 12 mm at 3 sides) possible
2) Slot for cushioning screw 0.8 mm
3) Do not exceed the given max. torque M-K of the piston rod or the non-rotating function may not work.
4) When assembling piston rod mountings, the piston rod must be secured with a tool to prevent twisting.
5) View without hexagon nut on piston rod and cylinder front end cover
S = stroke

Piston Ø	A1/A2	B	C –2	D1/D2	E H9	EE1/EE2	F	GA/GB	H	K	L	M1/M2
12	19	22	15	14.5	6	M5	8	M16x1,5	M6	46	75	8
16	21	22	15	15.5	6	M5	8	M16x1,5	M6	56	82	6
20	25	24	19	17.5	8	G 1/8	10	M22x1,5	M8	68	95	8
25	28.5	28	21	19.25	8	G 1/8	10	M22x1,5	M10x1,25	70	104	8

Piston Ø	MM	N	P	R	T d13	T1	U	V	X	SW1	SW2	SW3	Z/Z1
12	6	17	17	10	12	9	19	14	3.2	22	5	10	2.5
16	6	16	17	13	12	9	23	15.8	3	22	5	10	6.6
20	8	18	19	16	16	12.5	27	17.5	4	30	7	13	9.3
25	10	21	21	15	16	12.5	30	18.8	5	30	9	17	9.3

Piston Ø	Y/Y1	MK	Wi
12	7	0,10	±3,9°
16	2.4	0,15	±3,2°
20	3	0,25	±2,5°
25	3	0,40	±2,2°

MK = max. torque at piston rod
Wi = angle of rotation of piston rod

Supplementary products
Part numbers marked in bold are available from the central warehouse in Germany, see the shopping basket for more detailed information