Pressure regulators → Supplementary products

Pressure regulator

► Qn = 600 l/min ► plug-in with tube nut, external thread ► Poppet valve

00111948_b

Working pressure min./max.	1 bar / 10 bar
Ambient temperature min./max.	-10°C / +70°C
Medium temperature min./max.	-10°C / +70°C
Medium	Compressed air
Materials:	
Housing	Brass, galvanized; Polyamide
Seals	Acrylonitrile Butadiene Rubber

Technical Remarks
■ The pressure dew point must be at least 15 °C under ambient and medium temperature and may not exceed 3 °C.

	Compressed air connection		Adjustment range min./max.	Nominal flow	Weight	Fig.	Part No.
	Input	Output		Qn 1 → 2			
			[bar]	[l/min]	[kg]		
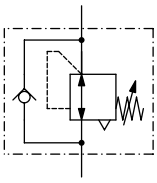	G 1/8	Ø 4	1 / 8	600	0.1	Fig. 2	**0821302072**
	G 1/8	Ø 6			0.1	Fig. 2	0821302073
	G 1/4	Ø 4			0.08	Fig. 1	**0821302074**
	G 1/4	Ø 6			0.08	Fig. 1	0821302075
Nominal flow Qn at 6 bar and Δp = 1 bar							

Application example

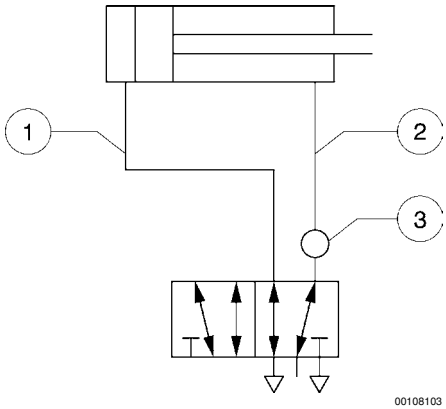

00108103

1) e.g. forward stroke with max. pressure
2) return stroke with reduced pressure
3) installation point on directional control valve
At low tightening torque, the sealing ring enables the banjo union to swivel through 360°. Further tightening locks the banjo union into position.
Adjust pressure via adjustment screw with hexagon socket. Lock using counter nuts.

Pressure regulators → Supplementary products

Pressure regulator

► Qn = 600 l/min ► plug-in with tube nut, external thread ► Poppet valve

Pressure characteristics curve (flow rate from 1 to 2)

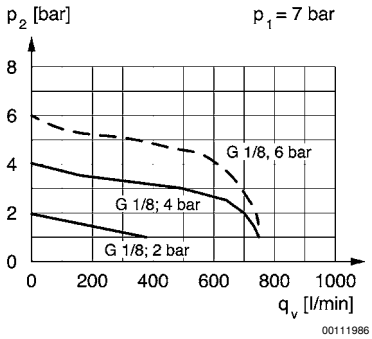

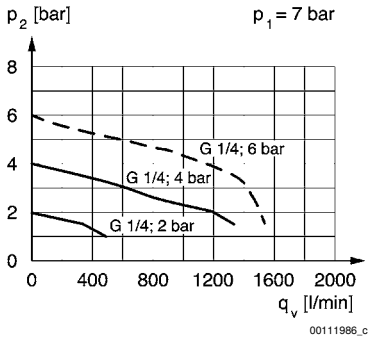

p1 = working pressure; p2 = secondary pressure; qv = nominal flow

Fig. 1

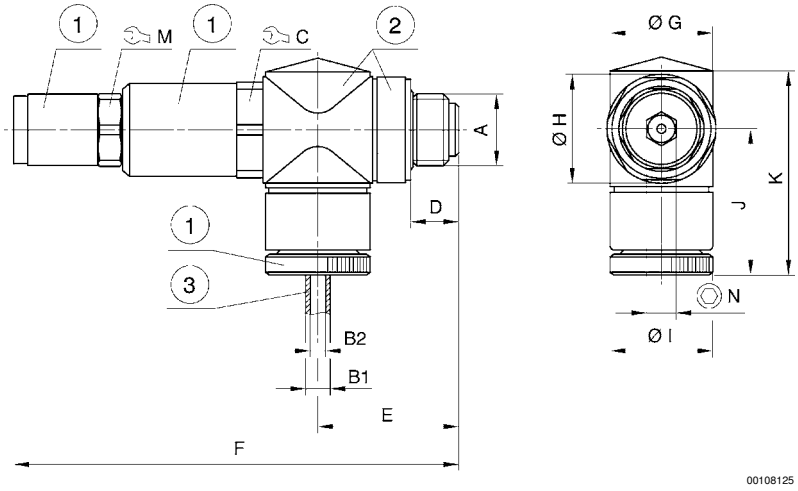

1) galvanized brass
2) polyamide
3) tubing

Part No.	A	B1	B2	C	D	E	F	G	H	I	J	K
0821302074	G 1/4	6	4	17	9.5	25.8	78.8	13	19	13	25.5	37.6
0821302075	G 1/4	8	6	17	9.5	25.8	78.8	18	19	18	27	39.8

Pressure regulator

► Qn = 600 l/min ► plug-in with tube nut, external thread ► Poppet valve

Part No.	M	N										
0821302074	13	5										
0821302075	13	5										

Fig. 2

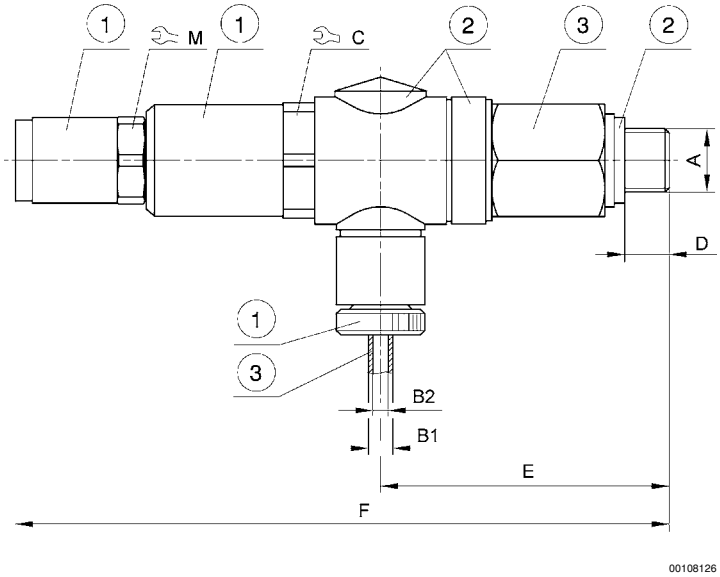

1) galvanized brass
2) polyamide
3) galvanized brass
4) hose

Part No.	A	B1	B2	C	D	E	F	M				
0821302072	G 1/8	6	4	17	6.5	42.3	95.3	13				
0821302073	G 1/8	6	4	17	6.5	42.3	95.3	13				