Directional valves → Supplementary products

3/2-way valve, Series DO35

► Qn = 140 l/min ► pipe connection ► compressed air connection output: G 1/8 ► Electr. connection: Plug, ISO 4400, form A ► Pilot: NC ► Manual override: with detent

00110100

Version	Poppet valve
Sealing principle	soft sealing
Working pressure min./max.	0 bar / 10 bar
Ambient temperature min./max.	-10°C / +50°C
Medium temperature min./max.	-10°C / +50°C
Medium	Compressed air
Max. particle size	5 µm
Oil content of compressed air	0 mg/m³ - 5 mg/m³
Degree of protectionwith electrical connector/plug	IP 65
Duty cycle	100 %
Mounting screw	M5
Materials:	
Seals	Fluorocaoutchouc

Technical Remarks

- The pressure dew point must be at least 15 °C under ambient and medium temperature and may not exceed 3 °C.
- The oil content of compressed air must remain constant during the life cycle.
- Use only the approved oils from Bosch Rexroth, see chapter „Technical information“.

Operating voltage			Voltage tolerance			Power consumption	Switch-on power	Holding power
DC	AC 50 Hz	AC 60 Hz	DC	AC 50 Hz	AC 60 Hz	DC	AC 50 Hz	AC 50 Hz
						W	VA	VA
24 V	-	-	-10% / +10%	-	-	8	-	-
-	24 V	-	-	-10% / +10%	-	-	21	14
-	-	110 V	-	-	-10% / +10%	-	21	14
-	230 V	-	-	-10% / +10%	-	-	21	14

	MO	Compressed air connection			Operating voltage			Holding power	Switch-on power	Flow rate value		Part No.
		Input	Output	Exhaust	DC	AC 50 Hz	AC 60 Hz	AC 50 Hz	AC 50 Hz	Qn 1►2	Qn 2►3	
										[l/min]		
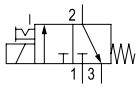		G 1/8	G 1/8	G 1/8	24 V	-	-	-	-	140	130	**0820005101**
					-	24 V	-	14	21			**0820005103**
					-	-	110 V	14	21			0820005102
					-	230 V	-	14	21			**0820005100**
					24 V	-	-	-	-			**0820005151**
					-	24 V	-	14	21			**0820005153**
					-	-	110 V	14	21			**0820005152**
					-	230 V	-	14	21			**0820005150**

Directional valves → Supplementary products

3/2-way valve, Series DO35

► Qn = 140 l/min ► pipe connection ► compressed air connection output: G 1/8 ► Electr. connection: Plug, ISO 4400, form A ► Pilot: NC ► Manual override: with detent

Part No.	Note
0820005101	1)
0820005103	1)
0820005102	1)
0820005100	1)
0820005151	2); 3)
0820005153	2); 3)
0820005152	2); 3)
0820005150	2); 3)

MO = Manual override
1) single connecting valve
2) manifold valve
3) Blocking principle: Single base plate principle
Nominal flow Qn at 6 bar and Δp = 1 bar

single connecting valve

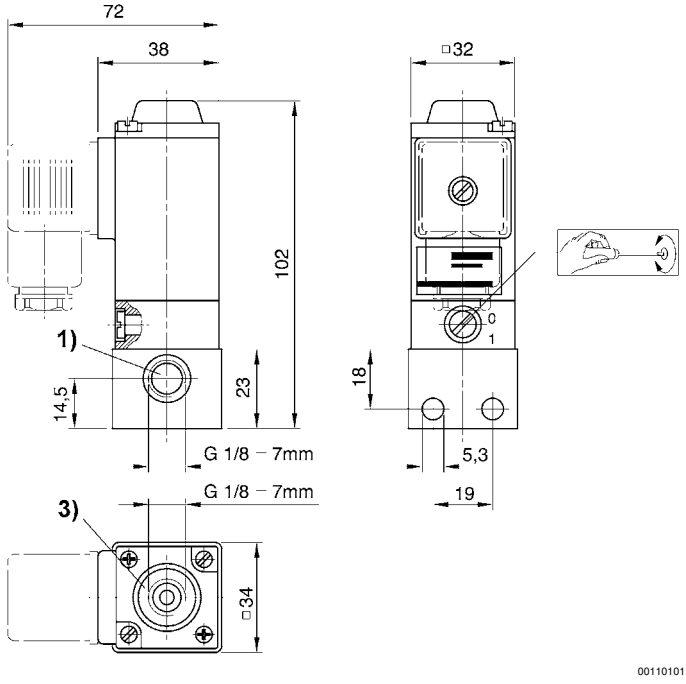

1) Port 1
3) Port 3

Directional valves → Supplementary products

3/2-way valve, Series DO35

► Qn = 140 l/min ► pipe connection ► compressed air connection output: G 1/8 ► Electr. connection: Plug, ISO 4400, form A ► Pilot: NC ► Manual override: with detent

manifold valve

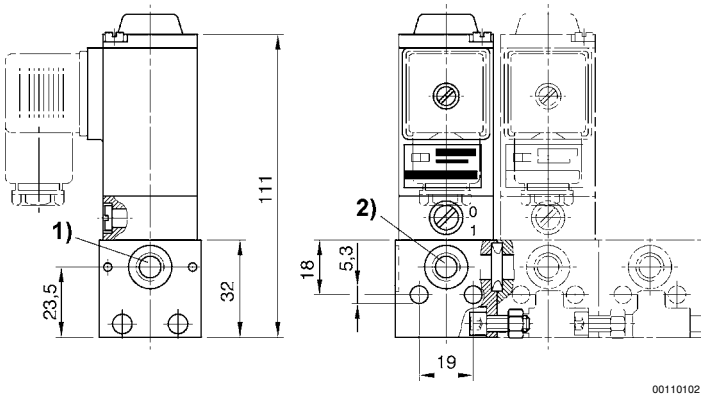

Scope of delivery: 2 screws M5x12, 2 nuts M5 DIN 934, 1 O-ring
1) Port 1
2) Port 2