Gripper and vacuum technology → Grippers

Series GSP-P, Version: Basic version

► 2-finger, parallel gripper ► with magnetic piston ► Easy–2–Combine-capable with connection kit
► Stroke/finger: 2 - 13 mm ► Recommended workpiece mass: 0.13 - 4.2 kg

Version	Parallel
Number of fingers	2
Grip tolerance	0,02 mm
Lubrication gripping elements	Lubricated for life
Ambient temperature min./max.	+5 °C / +60 °C
Medium	Compressed air
Max. particle size	5 µm
Oil content of compressed air	0 mg/m³ - 5 mg/m³
Working pressure min./max.	See table below
Pressure for determining forces	6 bar
Materials:	
Housing	Aluminum, anodized
Guide housing	Aluminum, hard-anodized
Seal	Acrylonitrile Butadiene Rubber
Function parts	Steel, hardened

Technical Remarks

- The pressure dew point must be at least 15 °C under ambient and medium temperature and may not exceed 3 °C.
- The oil content of compressed air must remain constant during the life cycle.
- Use only the approved oils from Bosch Rexroth, see chapter „Technical information“.
- The product is a part of the EasyHandling system.

	Type	Functional principle	Working pressure min./max.	Port	Effective gripping force of I.D gripper per finger, min.	Effective gripping force of O.D gripper per finger, min.	Part No.
			[bar]		[N]	[N]	
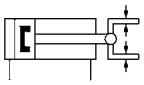	GSP-P-08	double-acting	2 / 8	M3	18	13	**R412000411**
	GSP-P-10			M3	35	29	**R412000414**
	GSP-P-16			M5	69	60	**R412000417**
	GSP-P-20			M5	140	120	**R412000420**
	GSP-P-25			M5	219	190	**R412000423**
	GSP-P-40			G 1/8	464	420	**R412000426**
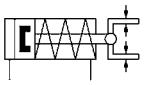	GSP-P-08	double-acting, closed without pressure	4.5 / 6.5	M3	-	16	**R412000412**
	GSP-P-10			M3		37	**R412000415**
	GSP-P-16			M5		70	**R412000418**
	GSP-P-20			M5		140	**R412000421**
	GSP-P-25			M5		230	**R412000424**
	GSP-P-40			G 1/8		545	**R412000427**
	GSP-P-08	double-acting, open without pressure	4.5 / 6.5	M3	21	-	R412000413
	GSP-P-10			M3	43		R412000416
	GSP-P-16			M5	79		R412000419
	GSP-P-20			M5	160		R412000422
	GSP-P-25			M5	269		R412000425
	GSP-P-40			G 1/8	589		R412000428

Gripper and vacuum technology → Grippers

Series GSP-P, Version: Basic version

► 2-finger, parallel gripper ► with magnetic piston ► Easy–2–Combine-capable with connection kit
► Stroke/finger: 2 - 13 mm ► Recommended workpiece mass: 0.13 - 4.2 kg

Part No.	Effective total gripping force I.D. gripper, min.	Effective total gripping force O.D. gripper, min.	Gripping force retention by spring, min./ max.	Max. permissible finger length	Max. per. finger mass	Stroke per finger	Mass moment of inertia	Closing time at 6 bar
	[N]	[N]	[N]	[mm]	[kg]	[mm]	[kgcm²]	[s]
R412000411	36	26	-	20	0.025	2	0.024	0.01
R412000414	70	58		25	0.04	3	0.075	0.01
R412000417	138	120		32	0.06	5	0.31	0.02
R412000420	280	240		40	0.09	6	0.62	0.03
R412000423	438	380		50	0.12	8	1.85	0.05
R412000426	928	840		64	0.3	13	14.1	0.1
R412000412	-	32	3 / 6	20	0.025	2	0.025	0.01
R412000415		74	8 / 13	25	0.04	3	0.076	0.01
R412000418		140	10 / 25	32	0.06	5	0.32	0.02
R412000421		280	20 / 50	40	0.09	6	0.63	0.02
R412000424		460	40 / 80	50	0.12	8	1.86	0.04
R412000427		1090	125 / 225	64	0.3	13	14.3	0.08
R412000413	42	-	3 / 6	20	0.025	2	0.025	0.02
R412000416	86		8 / 13	25	0.04	3	0.076	0.02
R412000419	158		10 / 25	32	0.06	5	0.32	0.03
R412000422	320		20 / 50	40	0.09	6	0.63	0.04
R412000425	538		40 / 80	50	0.12	8	1.86	0.07
R412000428	1178		125 / 225	64	0.3	13	14.3	0.12

Part No.	Opening time at 6 bar	Closing/opening time only with spring	Recommended workpiece mass	Air consumption per double-stroke at 1 bar	Weight	Note
	[s]		[kg]	[cm³]	[kg]	
R412000411	0.01	-	0.13	0.9	0.04	1)
R412000414	0.01		0.29	1.8	0.07	
R412000417	0.02		0.6	7	0.15	
R412000420	0.03		1.2	13	0.25	
R412000423	0.05		1.9	27	0.46	
R412000426	0.1		4.2	89	1.48	
R412000412	0.02	0.15	0.13	0.9	0.04	2)
R412000415	0.02	0.2	0.29	1.8	0.07	
R412000418	0.03	0.3	0.6	7	0.16	
R412000421	0.04	0.4	1.2	13	0.26	
R412000424	0.07	0.5	1.9	27	0.48	
R412000427	0.12	0.6	4.2	89	1.57	
R412000413	0.01	0.15	0.13	0.9	0.04	3)
R412000416	0.01	0.2	0.29	1.8	0.07	
R412000419	0.02	0.3	0.6	7	0.16	
R412000422	0.02	0.4	1.2	13	0.26	
R412000425	0.04	0.5	1.9	27	0.48	
R412000428	0.08	0.6	4.2	89	1.57	

1) Gripper type: external / internal
2) Gripper type: external
3) Gripper type: internal
Max. permissible finger length: measured from top edge of housing
Permissible mass moment of inertia (kg m²) depending on size and angular velocity (per second)

Series GSP-P, Version: Basic version

► 2-finger, parallel gripper ► with magnetic piston ► Easy–2–Combine-capable with connection kit
► Stroke/finger: 2 - 13 mm ► Recommended workpiece mass: 0.13 - 4.2 kg

Max. permissible forces and torques on gripper

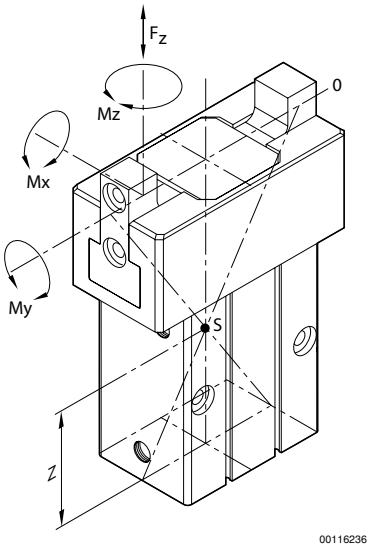

Type	Z	Max. permissible force Fz	Torque (Mx)	Torque (My)	Torque (Mz)				
		[N]	[Nm]	[Nm]	[Nm]				
GSP-P-08	21.5	120	1.3	1	0.25				
GSP-P-10	34.9	140	2	1.5	0.5				
GSP-P-16	37.9	200	3	2.5	1				
GSP-P-20	41.4	250	5.5	5	2.5				
GSP-P-25	47.7	450	9	9	6				
GSP-P-40	57.6	800	18	18	13				

Gripper and vacuum technology → Grippers

Series GSP-P, Version: Basic version

► 2-finger, parallel gripper ► with magnetic piston ► Easy–2–Combine-capable with connection kit
► Stroke/finger: 2 - 13 mm ► Recommended workpiece mass: 0.13 - 4.2 kg

Permissible gripping range

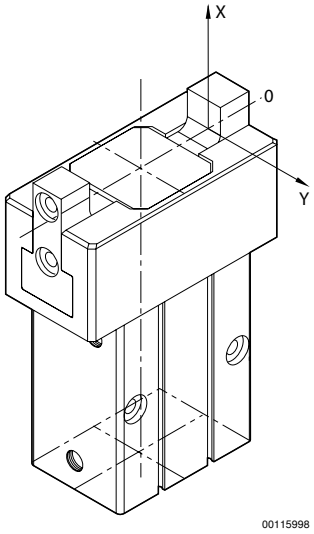

X = clamping height
Y = clamping width

GSP-P-08 gripping force/finger

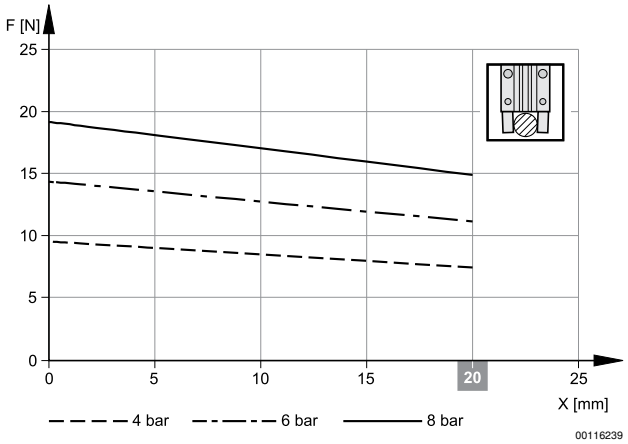

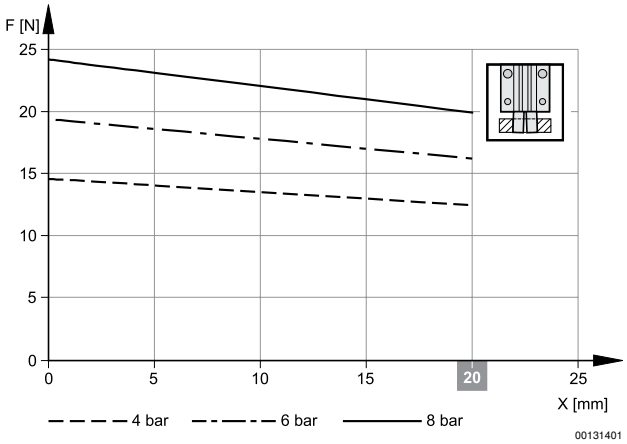

Series GSP-P, Version: Basic version

► 2-finger, parallel gripper ► with magnetic piston ► Easy–2–Combine-capable with connection kit
► Stroke/finger: 2 - 13 mm ► Recommended workpiece mass: 0.13 - 4.2 kg

GSP-P-08 gripping range

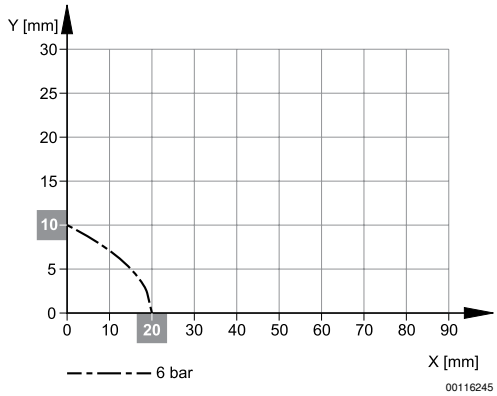

GSP-P-10 gripping force/finger

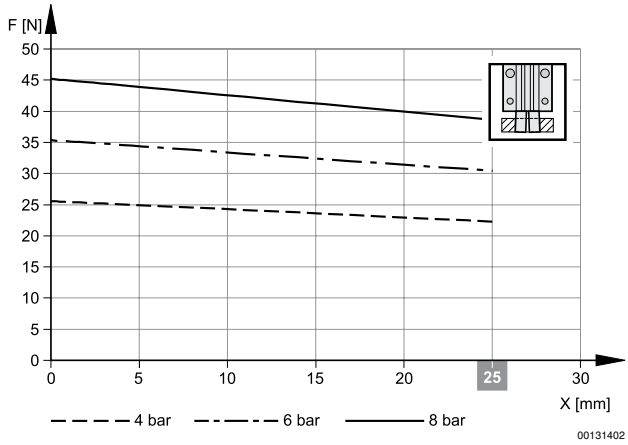

GSP-P-10 gripping range

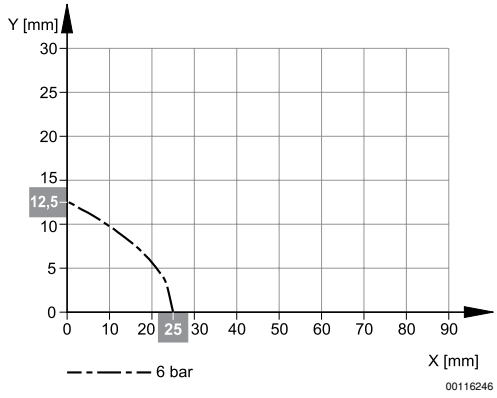

Gripper and vacuum technology → Grippers

Series GSP-P, Version: Basic version

► 2-finger, parallel gripper ► with magnetic piston ► Easy–2–Combine-capable with connection kit
► Stroke/finger: 2 - 13 mm ► Recommended workpiece mass: 0.13 - 4.2 kg

GSP-P-16 gripping force/finger

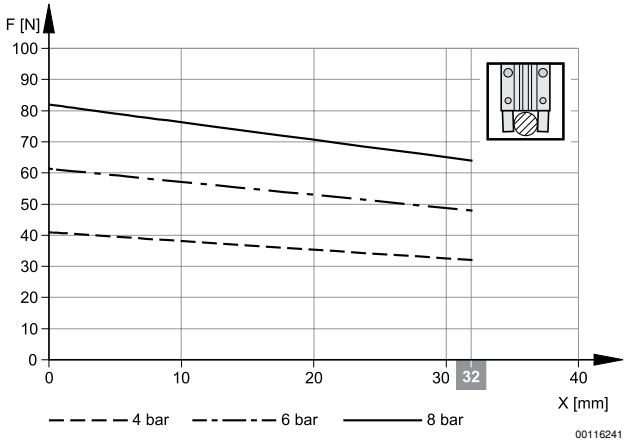

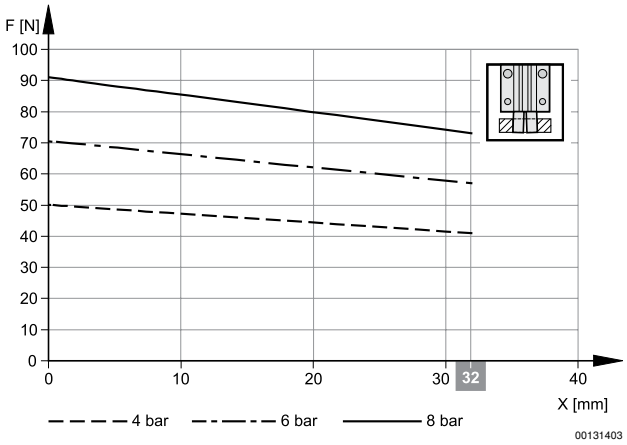

GSP-P-16 gripping range

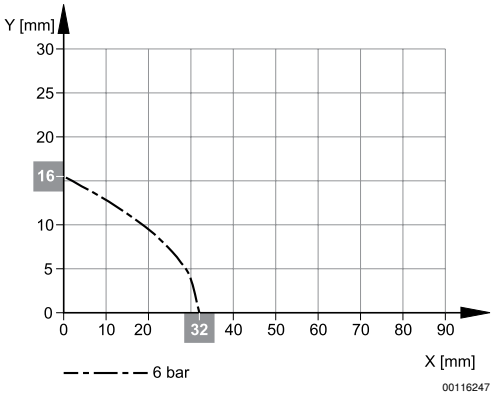

GSP-P-20 gripping force/finger

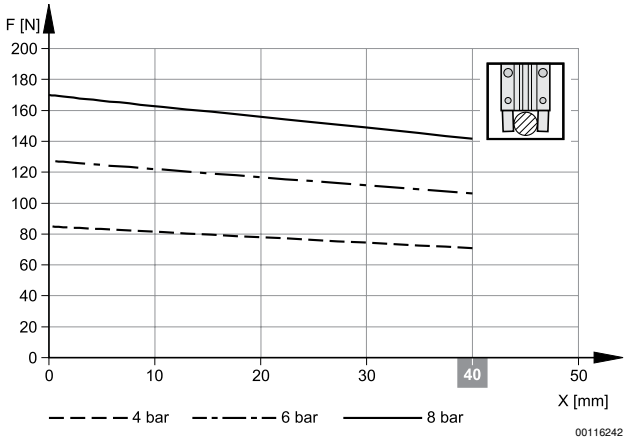

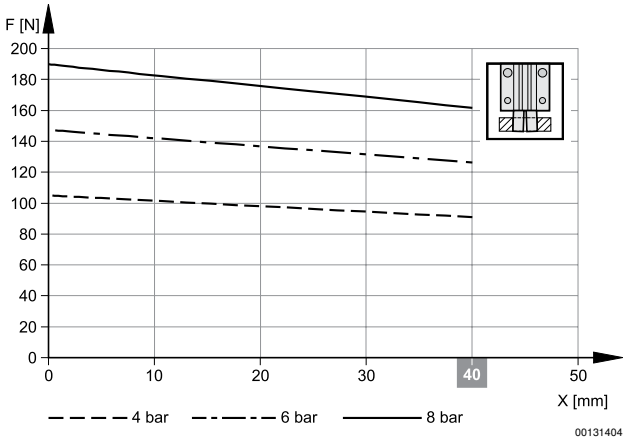

Series GSP-P, Version: Basic version

► 2-finger, parallel gripper ► with magnetic piston ► Easy–2–Combine-capable with connection kit
► Stroke/finger: 2 - 13 mm ► Recommended workpiece mass: 0.13 - 4.2 kg

GSP-P-20 gripping range

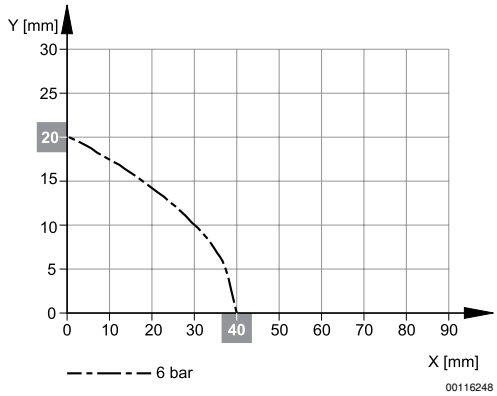

GSP-P-25 gripping force/finger

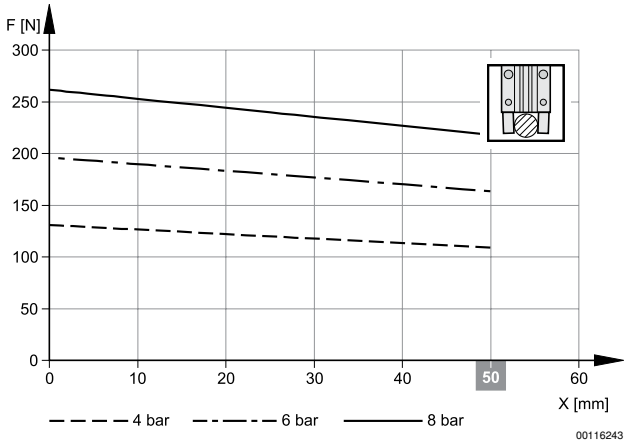

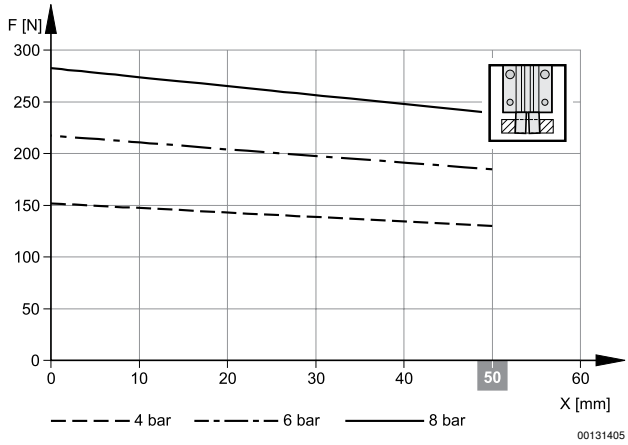

GSP-P-25 gripping range

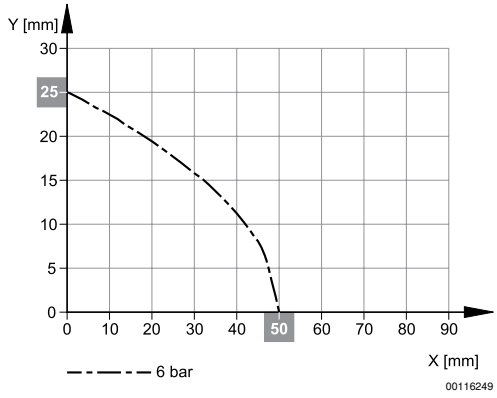

Gripper and vacuum technology → Grippers

Series GSP-P, Version: Basic version

► 2-finger, parallel gripper ► with magnetic piston ► Easy–2–Combine-capable with connection kit
► Stroke/finger: 2 - 13 mm ► Recommended workpiece mass: 0.13 - 4.2 kg

GSP-P-40 gripping force/finger

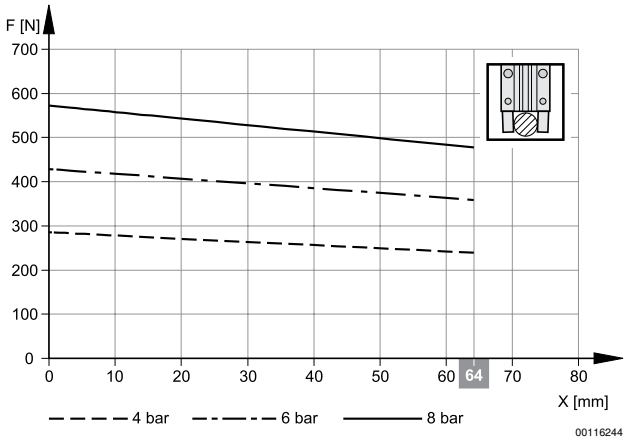

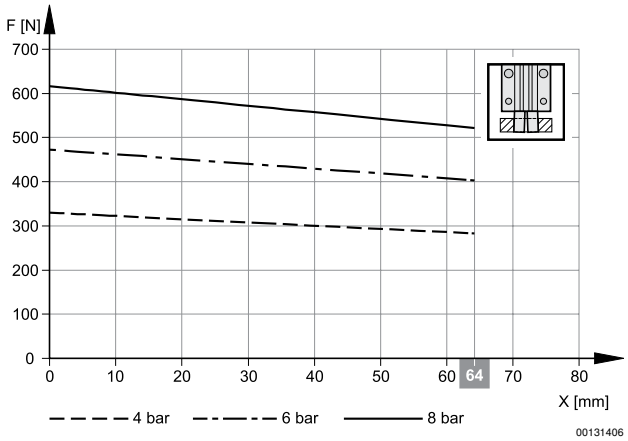

GSP-P-40 gripping range

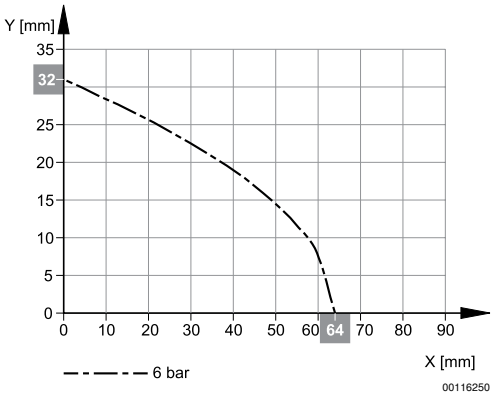

Gripper and vacuum technology → Grippers

Series GSP-P, Version: Basic version

► 2-finger, parallel gripper ► with magnetic piston ► Easy–2–Combine-capable with connection kit
► Stroke/finger: 2 - 13 mm ► Recommended workpiece mass: 0.13 - 4.2 kg

GSP-P-08

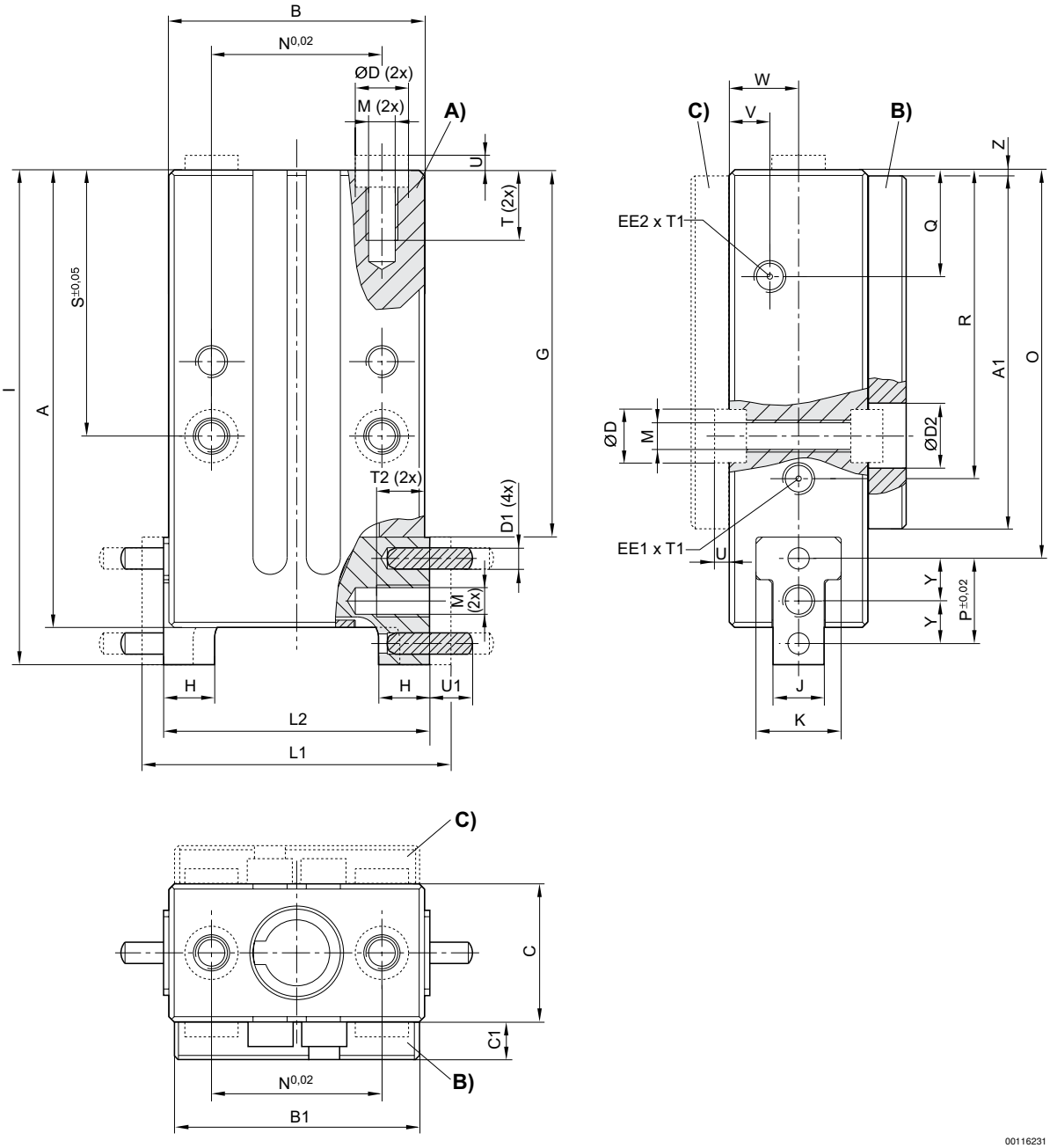

L1 = gripper open
L2 = gripper closed
EE1 = close gripper air connection
EE2 = open gripper air connection
Centering rings (2 pcs.) and cylinder pins are included in the scope of delivery.
A) Representation without clamp mounting
B) Clamp mounting for mounting sensors and cylinder screws M3x6 (DIN 7984) included in scope of delivery
C) Clamp mounting can be converted (by the customer) as required

Series GSP-P, Version: Basic version

► 2-finger, parallel gripper ► with magnetic piston ► Easy–2–Combine-capable with connection kit
► Stroke/finger: 2 - 13 mm ► Recommended workpiece mass: 0.13 - 4.2 kg

Type	A	A1	B	B1	C	C1	D	D1	D2	EE1	EE2	G
GSP-P-08	43	33	24	23	13	3.5	Ø 5 K6	Ø 2 M6	Ø 6	M3	M3	34.5

Type	H	I	J	K	L1	L2	M	N	O	P	Q	R
GSP-P-08	4.8	46.5	4.8	8	29	25	M3	16	36.5	8	10	29

Type	S	T	T1	T2	U	U1	V	W	Y	Z		
GSP-P-08	25	6.5	4	5	1.6	4	3.8	6.5	4	0.5		

Gripper and vacuum technology → Grippers

Series GSP-P, Version: Basic version

► 2-finger, parallel gripper ► with magnetic piston ► Easy–2–Combine-capable with connection kit
► Stroke/finger: 2 - 13 mm ► Recommended workpiece mass: 0.13 - 4.2 kg

GSP-P-10-...-40

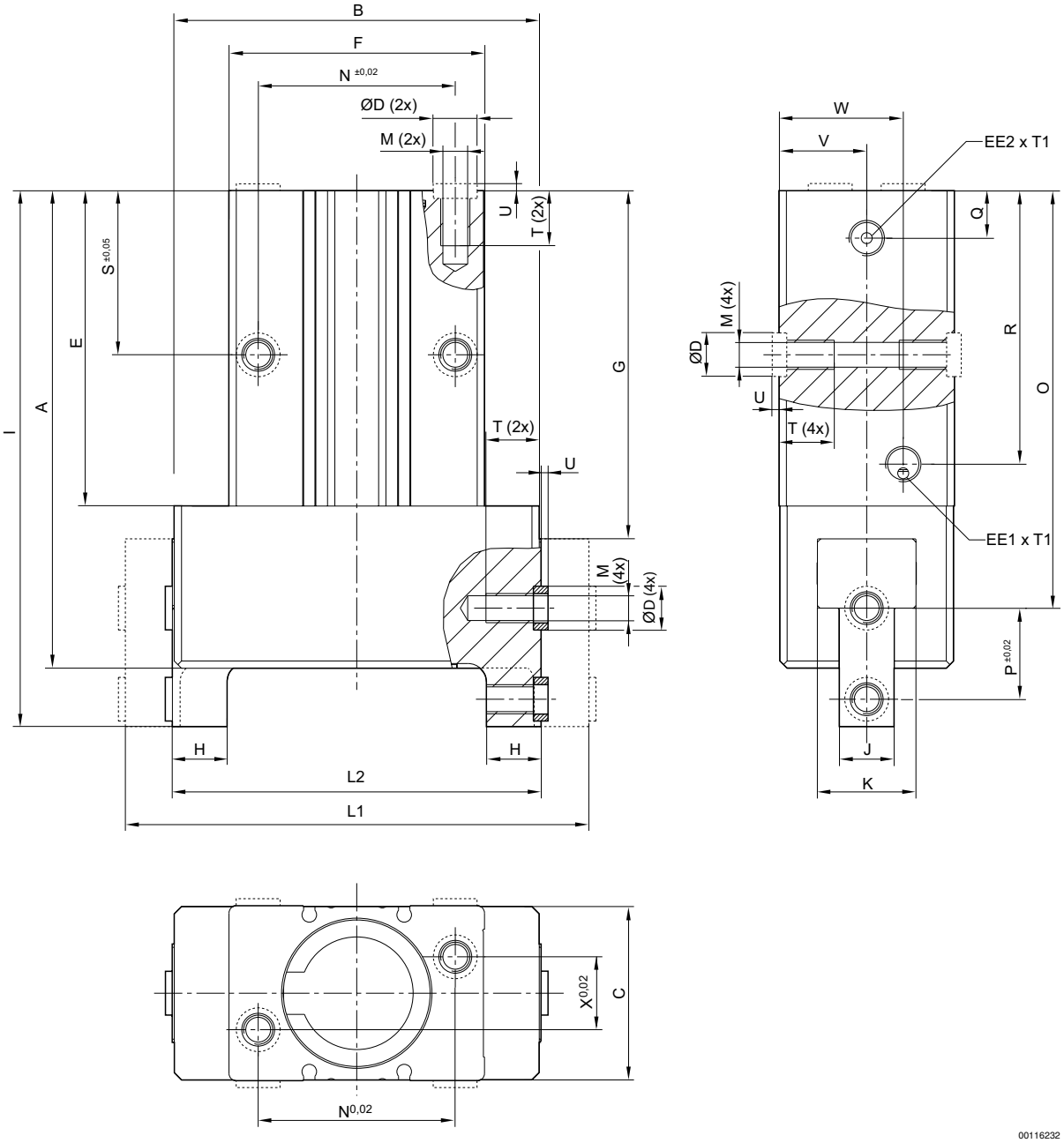

L1 = gripper open
L2 = gripper closed
EE1 = close gripper air connection
EE2 = open gripper air connection
Centering rings (6 pieces) included in scope of delivery

Type	A	B	C	D K6	E	EE1	EE2	F	G	H	I	J
GSP-P-10	56	32	16	Ø 5	41	M3	M3	28	44	6	61	6
GSP-P-16	68	46	20	Ø 5	47	M5	M5	36	51	7	74.5	7
GSP-P-20	79	50	24	Ø 7	53.5	M5	M5	42	58.5	8	87	8

Gripper and vacuum technology → Grippers

Series GSP-P, Version: Basic version

► 2-finger, parallel gripper ► with magnetic piston ► Easy–2–Combine-capable with connection kit
► Stroke/finger: 2 - 13 mm ► Recommended workpiece mass: 0.13 - 4.2 kg

Type	A	B	C	D K6	E	EE1	EE2	F	G	H	I	J
GSP-P-25	95	64	30	Ø 7	63	M5	M5	50	69	10	106	10
GSP-P-40	131	100	48	Ø 12	86.5	G 1/8	G 1/8	70	95.5	15	147	15

Type	K	L1	L2	M	N	O	P	Q	R	S	T	T1
GSP-P-10	10	39	33	M3	20	52	6	10.5	32	21	6.5	4
GSP-P-16	12	57	47	M3	28	61.5	10	11	41	24	6.5	5
GSP-P-20	14	63	51	M4	32	70.5	12	11	46	27	8.5	6
GSP-P-25	17	81	65	M5	40	85.5	16	11	55	32	11.5	6
GSP-P-40	27	127	101	M8	54	114.5	25	13	75	45	15	6

Type	U	V	W	X								
GSP-P-10	1.6	5.3	11.2	–								
GSP-P-16	1.6	5.5	14.5	–								
GSP-P-20	1.6	6.5	17.5	–								
GSP-P-25	1.6	9	21	–								
GSP-P-40	2.1	24	34	20								

Sensor GSP-P-08

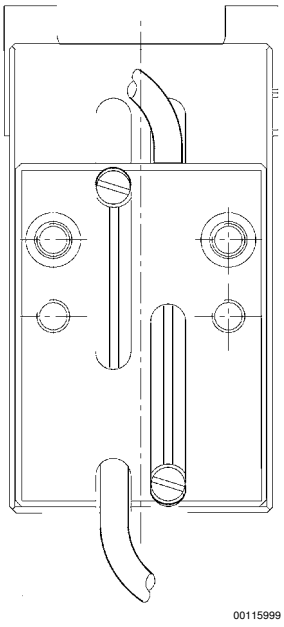

Groove width = 4 mm, suitable sensors: ST4, ST4-2P

Series GSP-P, Version: Basic version

► 2-finger, parallel gripper ► with magnetic piston ► Easy–2–Combine-capable with connection kit
► Stroke/finger: 2 - 13 mm ► Recommended workpiece mass: 0.13 - 4.2 kg

Sensor GSP-P-10...- 40

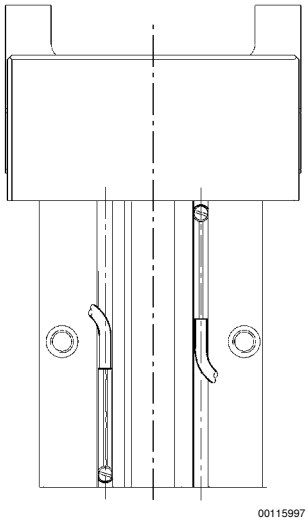

Groove width = 4 mm, suitable sensors: ST4, ST4-2P