Directional valves → Electrically operated

5/2-way valve, Series TC08

► Qn = 800 l/min ► pipe connection ► compressed air connection output: G 1/8 ► Electr. connection: Plug, ISO 15217, form C ► Manual override: without detent ► single solenoid, double solenoid

00137673

Version	Spool valve, zero overlap
Sealing principle	soft sealing
Mounting on manifold strip	P-strip
Working pressure min./max.	See table below
Control pressure min./max.	See table below
Ambient temperature min./max.	-10°C / +50°C
Medium temperature min./max.	-10°C / +50°C
Medium	Compressed air
Max. particle size	5 µm
Oil content of compressed air	0 mg/m³ - 5 mg/m³
Connector standard	ISO 15217
Degree of protectionwith electrical connector/plug	IP 65
Duty cycle	100 %
Generic emission standard in accordance with	EN 50081:1992
mounting screw tightening torque	2 Nm
Weight	See table below
Materials:	
Housing	Polyamide, fiber-glass reinforced
Seals	Acrylonitrile Butadiene Rubber; Polyurethane
Front plate	Polyamide, fiber-glass reinforced

Technical Remarks
■ The pressure dew point must be at least 15 °C under ambient and medium temperature and may not exceed 3 °C.
■ The oil content of compressed air must remain constant during the life cycle.
■ Use only the approved oils from Bosch Rexroth, see chapter „Technical information“.

Operating voltage	Voltage tolerance	Power consumption
DC	DC	DC
		W
24 V	-10% / +10%	2

	MO	Compressed air connection			Operating voltage	Flow conductance		Flow rate value	Nominal resistance	Working pressure min./max.	Part No.
		Input	Output	Exhaust	DC	b	C	Qn			
							[l/(s*bar)]	[l/min]		[bar]	
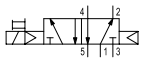		G 1/8	G 1/8	G 1/8	24 V	0.36	3.5	800	280	2.5 / 10	**0820060101**
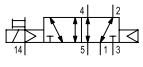		G 1/8	G 1/8	G 1/8	24 V	0.36	3.5	800	280	-0.9 / 10	**0820060151**

Directional valves → Electrically operated

5/2-way valve, Series TC08

► Qn = 800 l/min ► pipe connection ► compressed air connection output: G 1/8 ► Electr. connection: Plug, ISO 15217, form C ► Manual override: without detent ► single solenoid, double solenoid

	MO	Compressed air connection			Operating voltage	Flow conductance		Flow rate value	Nominal resistance	Working pressure min./max.	Part No.
		Input	Output	Exhaust	DC	b	C	Qn			
							[l/(s*bar)]	[l/min]		[bar]	
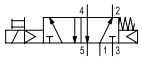		G 1/8	G 1/8	G 1/8	24 V -	0.36	3.5	800	280 -	3 / 10	**0820060126** R422103047
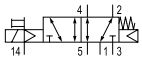		G 1/8	G 1/8	G 1/8	24 V -	0.36	3.5	800	280 -	-0.9 / 10	**0820060176** R422103049
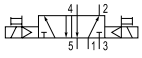		G 1/8	G 1/8	G 1/8	24 V -	0.36	3.5	800	280 -	2 / 10	**0820060601** R422103051
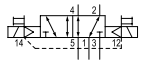		G 1/8	G 1/8	G 1/8	24 V -	0.36	3.5	800	280 -	-0.9 / 10	**0820060651** R422103053

Part No.	Control pressure min./max.	Switch-on time	Switch-off time	Weight	Note
	[bar]	[ms]	[ms]	[kg]	
0820060101	2.5 / 10	14	18	0.14	1)
0820060151	2.5 / 10	14	18	0.14	2)
0820060126 R422103047	3 / 10	14	17	0.14	1) 1); 3)
0820060176 R422103049	3 / 10	14	17	0.14	2) 2); 3)
0820060601 R422103051	2 / 10	10	10	0.172	1) 1); 3)
0820060651 R422103053	2 / 10	10	10	0.172	2) 2); 3)

MO = Manual override
1) Pilot: internal
2) Pilot: external
3) Basic valve without coil
push-in fitting: Brass, nickel-plated; Die cast zinc, chrome-plated
Nominal flow Qn at 6 bar and Δp = 1 bar

Directional valves → Electrically operated

5/2-way valve, Series TC08

► Qn = 800 l/min ► pipe connection ► compressed air connection output: G 1/8 ► Electr. connection: Plug, ISO 15217, form C ► Manual override: without detent ► single solenoid, double solenoid

Dimensions, single solenoid

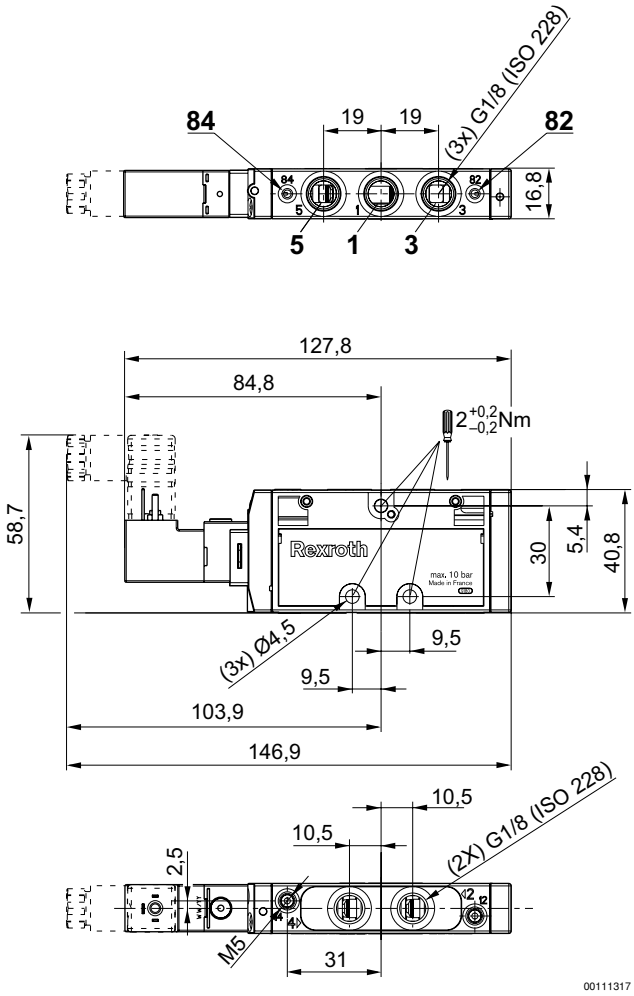

Directional valves → Electrically operated

5/2-way valve, Series TC08

► Qn = 800 l/min ► pipe connection ► compressed air connection output: G 1/8 ► Electr. connection: Plug, ISO 15217, form C ► Manual override: without detent ► single solenoid, double solenoid
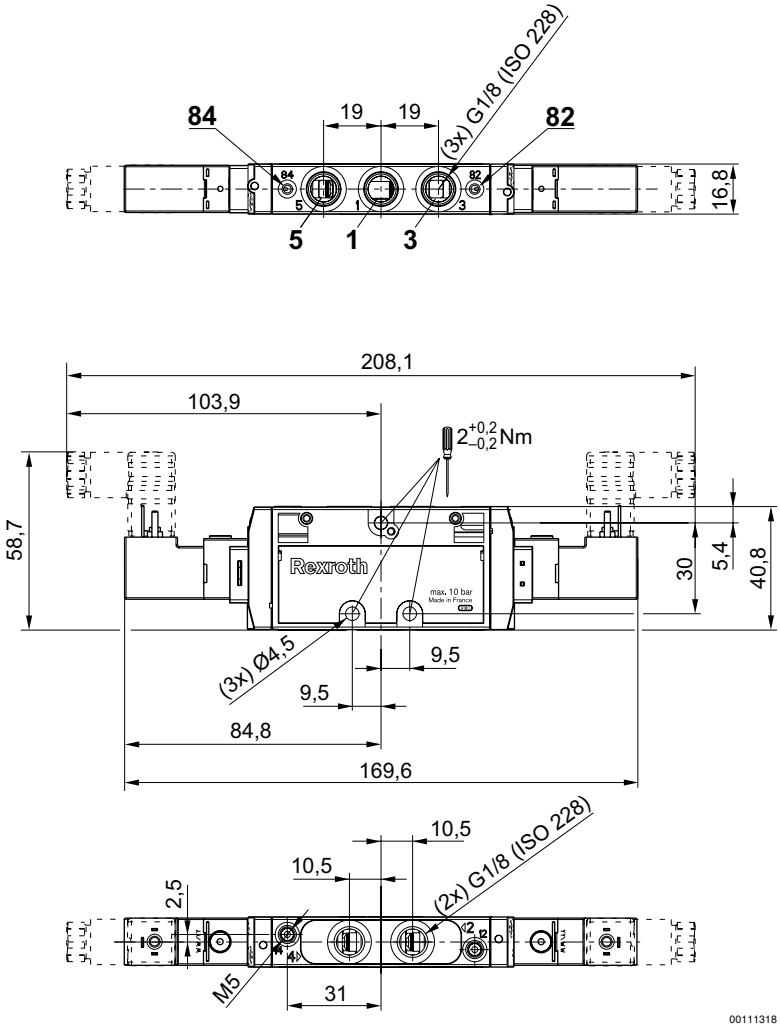
Dimensions, double solenoid